DONLY



Industrial Gear Units

DLH/DLB. Series

Operating Instructions

Version

2024.6

Table of contents

1 Introduction 1
1.1 Legal information 1
1.2 General information 2
1.3 Lubricants 3
2 Safety instructions 4
2.1 Security notes 4
2.2 The five safety rules 4
2.3 General information 4
2.4 General warnings and symbols 6
2.5 Special types of danger and personal protective equipment 6
2.6 Intended use 9
3 Description 11
3.1 General description 11
3.2 Output shaft versions 12
3.3 Housing 13
3.4 Oil supply to the gear unit 15
3.5 Bearing arrangement of the shafts 15
3.6 Shaft seal 15
3.7 Backstop 16
3.8 Cooling 17
3.9 Couplings 19
3.10 Shrink disk 19
3.11 Heating 19
3.12 Oil level indicator 20
4 Application planning 21
4.1 Scope of delivery 21
4.2 Transport 21
4.3 Attachment points 23
4.4 Corrosion protection and storage conditions 24
5 Assembly 26
5.1 General assembly instructions 26
5.2 Unpacking the gear unit 27
5.3 Gear unit assembly 27
5.4 Couplings 32
5.5 Gear unit with hollow shaft and parallel keyway 34
5.6 Gear unit with hollow shaft and spline according to DIN 5480 37
5.7 Gear unit with type F flange shaft 37
5.8 Gear unit with hollow shaft and shrink disk 37
5.9 Connecting components 38
5.10 Tightening procedure 39
5.11 Final work 42

6 Commissioning 43
6.1 Measures prior to commissioning 43
6.2 Measures during commissioning 44
7 Operation 46
7.1 Operating data 46
7.2 Irregularities in operation 46
7.3 Taking the unit out of service 47
8 Servicing 48
8.1 General maintenance information 48
8.2 Maintenance schedule 48
8.3 Maintenance and servicing work 50
8.4 Possible faults 54
9 Disposal 58
10 Spare parts 59

1 Introduction

Naming convention

This product, which can be used as a gear reduction unit or multiplier gear unit, is referred to below as "gear unit".

1.1 Legal information

Warning system

These instructions contain information you must observe for your own personal safety as well as to avoid damage to property and persons. The information regarding your personal safety is highlighted with a warning triangle. Information exclusively regarding property damage alone is not marked with a warning triangle. Depending on the hazard class, the warnings shall be depicted as follows, in descending order.

⚠ DANGER

means that death or severe physical injury **will** occur if the relevant precautionary measures are not taken.

⚠ WARNING

means that death or severe physical injury **may** occur if the relevant precautionary measures are not taken.

⚠ CAUTION

means that mild physical injury may occur if the relevant precautionary measures are not taken.

NOTICE

means that damage to property may occur if the relevant precautionary measures are not taken.

If multiple hazard classes come into play, the warning for the highest level in question shall always be used. If a warning containing the warning triangle warns of harm to individuals, the same warning may also include a warning regarding damage to property.

Information

Information

Information offers additional notes, assistance and tips for handling the product.

Qualified personnel

The product/system associated with this documentation may only be used by **qualified personnel** trained to perform the relevant tasks, taking into account the associated documentation for the relevant tasks, particularly the safety information and warnings included therein. Due to their qualification and experience, qualified personnel are capable of detecting risks and avoiding potential hazards when dealing with these products/systems.

Intended use of DONLY products

Please note the following:

⚠ WARNING

DONLY products are only suitable for the uses set out in the catalogue and associated technical documentation. If third-party products and components are used, these must be recommended and/or authorized by DONLY. Safe and flawless operation of the products requires proper transport, proper storage, setup, assembly, installation, commissioning, operation and maintenance. The permissible environmental conditions must be adhered to. Instructions in the associated documentation must be followed.

Trademarks

All designations marked with the trademark DONLY are registered trademarks of DONLY. Other designations in this document may be trademarks whose use by third parties for their own purposes may violate the rights of the owner.

Liability disclaimer

We have assessed the contents of these instructions for compliance with the hardware and software described. However, deviations cannot be ruled out, so we are unable to accept liability for full compliance. The details in these instructions are regularly reviewed and necessary corrections are contained in subsequent editions.

1.2 General information

Purpose of these instructions

These instructions describe the gear unit and provide information about its handling from assembly to maintenance.

Please keep these instructions for later use. Please read these instructions prior to handling the gear unit and observe the information they contain.

Information Liability disclaimer

Please make sure that every person who is commissioned to work on the gear unit has read and understood these instructions prior to handling the gear unit and adheres to all of the points. Non-adherence to the instructions can cause product or property damage or personal injury.
DONLY accepts no liability for damages and disruption to operations that result from non-adherence to the instructions.

The described gear unit represents the state of the art at the time these instructions were

printed.
In the interest of further development, DONLY reserves the right to make such changes to the individual assembly units and accessories that increase performance and safety whilst maintaining the essential features.

Required basic knowledge

In order to understand these instructions, you will need the following general knowledge about gear units. You will also need a basic understanding of the following topics:

- Application planning
- Assembly
- Commissioning
- Maintenance

1.3 Lubricants

DONLY delivers the gear units without oil fill. This means the gear units must be filled with the correct oil grade and quantity before startup. You fine the corresponding information on the nameplate of the gear unit.

A minimum operating viscosity of 25 cSt must be ensured.

Viscosity ISOVG at 40℃ in mm2/s(cSt)	**Minimum temperature limit in ℃ for**			
	Dip lubrication		Forced lubrication	
	Mineral oil	Synthetic oil	Mineral oil	Synthetic oil
VG 220	-15	-25	10	0
VG 320	-12	-25	15	5
VG 460	-9	-25	/	/

If the temperature are below the values as listed in the table,the oil must be heated.

To avoid misunderstandings, DONLY points out that, by making this recommendation, it is not approving the product in the sense of expressing a warranty for the quality of the lubricants supplied by your supplier. Every lubricant manufacturer is required to guarantee the quality of his/her products.

Information such as oil type, oil viscosity and required oil quantity can be found on the rating plate of the gear unit and in the documentation supplied with the gear unit.

The oil quantity specified on the rating plate is an approximate value. The actual quantity of oil required is determined by the marking on the oil dipstick or oil sight glass.

The oils listed there undergo continuous testing. As a result, the recommended oil types might in future be removed from the list or replaced by more advanced oils.

DONLY recommends regular inspection to ascertain whether the selected lubricating oil is still approved by DONLY. If it is not, another brand of oil should be selected instead.

2 Safety instructions

2.1 Security notes

DONLY offers products and solutions with industrial security functions, which support the safe and secure operation of plants, systems, machines and networks.

In order to safeguard plants, systems, machines and networks against cyber threats it is necessary to implement (and continually maintain) a holistic industrial security concept that corresponds to the current state of the art. DONLY products and solutions undergo continuous development in this respect.

Customers are responsible for preventing unauthorized access to their plants, systems, machines and networks. These systems, machines and components shall be connected to the company network or the Internet only when and to the extent that this is absolutely necessary and appropriate protective measures (e.g. firewalls and/or network segmentation) shall be taken.

You can find further information about possible protection measures as part of Industrial Security in the following international series of standards, for example: IEC 62443 "Network and system security".

DONLY products and solutions undergo continuous development in order to make them even safer. DONLY strongly recommends that you regularly implement product updates as soon as they become available and that you only use the current product versions. Use of older or no longer supported versions can increase the risk of cyber threats.

2.2 The five safety rules

In order to protect yourself and prevent any damage to property, always observe the safety relevant information and the following five safety rules (as per EN 501101 "Working on isolated equipment") when working on electrical components of the plant.

Prior to starting work on the machine, follow the safety rules listed below:

1. Disconnect
   Also disconnect auxiliary circuits such as the anti-condensation heater
2. Safeguard against restart
3. Ensure that the system is de-energised
4. Earth and short circuit
5. Cover or cordon off adjacent live parts

When all the work is complete, cancel the safety measures in the reverse sequence.

2.3 General information

Introduction

All work on the gear unit should be performed with care and only by qualified personnel.

Symbols on the gear unit

The following symbols apply to the gear unit:

Points labelled on the gear unit	**Symbol**
Earth connection point	
Air relief point	
Oil filling point	
Oil draining point	
Oil level indicator	
Oil level measurement	
Oil overflow	
Connection point for vibration monitoring	
Lubrication point	
Apply grease	
Lifting eye	
Eye bolt	
Do not unscrew	
Alignment surface, horizontal	
Alignment surface, vertical	
These symbols indicate the oil level checking procedure using the oildipstick.	
These symbols indicate that the oil dipstick must be firmly screwed in.	

Table 2-1: Symbols and markings

2.4 General warnings and symbols

The following table contains general warnings and their associated symbols.

ISO	ANSI	Warning
		Warning – hazardous electrical voltage
		Warning – explosive substances
	---	Warning – entanglement hazard
	---	Warning – hot surfaces
	---	Warning – corrosive substances
	---	Warning – suspended load
	---	Warning – hand injuries

Table 2-2: General warnings

2.5 Special types of danger and personal protective equipment

Requirements

Fulfil the following requirements before commencing work on the gear unit:

- Ensure that the oil pressure lines are depressurised.
- Only perform work on the gear unit when it is not in operation.
- Disconnect electrical systems from the power supply.



⚠ DANGER

Electric shock

Live parts can cause electric shock.

Ensure that the entire plant is de-energised before starting electrical installation work.

Protective equipment

Wear the following personal protective equipment when handling the gear unit:

- Safety shoes
- Overalls
- Helmet
- Safety gloves
- Safety goggles

⚠ WARNING

Risk of eye injury

Small foreign particles such as sand or dust can enter the cover plates of the rotating parts and be hurled back by them.

Wear safety goggles.

Dangers during operation

Damage to the gear unit is possible.

Switch the gear unit to standstill immediately if inexplicable changes are noticed during operation. Such changes may include unusual gear unit noise or a significant increase in operating temperature.

⚠ WARNING

Risk of falling

There is an increased risk of falling when standing or walking on the gear unit during operation.

Only walk or stand on the gear unit and its mounted components for maintenance and repair work when it is at a standstill. Do not walk or stand on shaft ends, protection covers, mounted components or pipes.



⚠ WARNING

Danger to life through rotating or moving parts

There is danger that rotating or moving parts may catch hold of you or pull you in.

Secure rotating and/or moving parts against contact using safeguards.

Surface temperature

The surface temperatures of the gear unit can become very extreme depending on the operating conditions.



⚠ WARNING

Risk of burns

Possible risk of serious burn injury from hot surfaces (>55°C).

Wear suitable protective gloves and protective clothing.

⚠ WARNING

Risk of scalding

Risk of serious injury possible through escaping hot operating media when these are being changed.

Wear suitable protective gloves, safety goggles and protective clothing.

⚠ WARNING

Danger due to low temperatures

Possible risk of serious injuries due to frost (pain, numbness, frostbite) on cold surfaces (<0°C).

Wear suitable protective gloves and protective clothing.

Chemical substances

Injuries can be sustained when using chemical substances.



⚠ WARNING

Risk of chemical burns due to chemical substances

There is a risk of chemical burns when handling aggressive cleaning agents.

Please observe the manufacturer's guidelines on how to handle cleaning agents and solvents. Wear suitable protective equipment (gloves, safety goggles). Please use binding agents to immediately clear up any spilt solvent.

⚠ CAUTION

Risk of injury due to chemically aggressive operating materials

There is a risk of injury to eyes and hands when handling chemically aggressive operating materials.

Please observe the safety instructions in the data sheets of the oil used. Wear suitable protective equipment (gloves, safety goggles). Use an oil-binding agent to immediately clean up spilt oil.

Danger of explosion

An explosion may occur in a potentially explosive atmosphere.



⚠ DANGER

Danger of explosion through ignition of a potentially explosive atmosphere

Danger to life through ignition of a potentially explosive atmosphere possible when operating the gear unit

Do not use the gear unit in potentially explosive atmospheres.

2.6 Intended use

Only use the gear unit according to the conditions specified in the service and delivery contract and the technical data in the Annex. Deviating operating conditions are considered improper use. The user or operator of the machine or plant is solely liable for any resulting damage.

When using the gear unit, please specifically observe the following:

- Do not make any modifications to the gear unit which go beyond the permissible handling described in these instructions. This also applies to the guards designed to prevent accidental contact.
- Only ever use original replacement parts.
- Other replacement parts are not tested and approved by DONLY. Non-approved replacement parts may possibly change the design characteristics of the gear unit and thus impair its active or passive safety.
- DONLY will accept no liability or warranty whatsoever for damage occurring as a result of the use of non-approved replacement parts. The same applies to any accessories which were not supplied by DONLY.

If you have any questions, please contact Customer Service.

⚠ WARNING

Risk of falling

Risk of serious injury through falling.

Only walk or stand on the gear unit for maintenance and repair work when it is at a standstill. Do not walk or stand on shaft ends, protective covers, mounted components or pipework.

Using the gear unit

When using the gear unit, please observe the following basic rules:

- Ensure that the gear unit is operationally safe.
- The gear unit must only be operated, maintained and repaired by authorised, trained, instructed and qualified personnel.
- The relevant occupational safety and environmental protection provisions must be taken into account in transport, assembly and dismantling, operation, servicing and maintenance.

- Cleaning the outside of the gear unit with a high pressure cleaning device is not permitted.
- Do not perform any welding work anywhere on the gear unit or connected parts. Do not use the gear unit or connected parts as an earthing point for electric welding operations. Gear parts and rolling contact bearings may be irreparably damaged by welding.
- Perform potential equalisation in accordance with the applicable regulations and directives.
- If there are no threaded holes on the gear unit for an earth connection, other suitable measures must be taken. This work must be carried out by specialists in electrical engineering.
- In the case of gear units that are operated in combination with electrical machines that generate current or through which current flows (e.g. motors and generators), take measures to ensure that no current can flow through the gear unit.
- Current flowing through the gear unit can result in irreparable damage to rolling contact bearings and gears. Short circuits, voltage flash overs and deposits of conductive dust, for example, can all allow current to flow.
- Use insulators and earth the gear unit properly.
- When removing any guards, store their fixings in a safe place.
- Removed guards must be refitted prior to starting.
- Observe the notices mounted on the gear unit, e.g. rating plate, direction of rotation arrow symbol, etc. The notices must be kept free from paint or dirt. Replace missing plates.
- Screws which have become unusable during assembly and dismantling must be replaced with new screws of the same strength class and design.

⚠ DANGER

Danger to life when the system is switched on

Death or serious injury will occur.

Always shut down the gear unit and any oil supply system (whether separate or attached to the gear unit) before you perform any work. Secure the drive aggregate against being operated accidentally as follows:

- Turn off the key-operated switch.
- Remove the fuses in the power supply.
- Attach an information notice to the start switch, clearly stating that work is being carried out on the gear unit.
- Ensure that the entire system is not under a load to avoid danger during dismantling work.

Further use of the gear unit

When integrating the gear unit in machines or systems, the machine or system manufacturer is obliged to include the provisions, instructions and descriptions contained in this set of instructions in their instructions.

3 Description

3.1 General description

The gear unit are reliable drive component for the use in different industries ectors, appropriate economical design solutions proved themselves under different operating conditions.

Gear units can be operated in both directions of rotation. Gear unit versions equipped with an axial fan, a backstop or an overrunning clutch are the exceptions in this case. DONLY must be consulted if, for these versions, the direction of rotation is to be reversed.

Designs

Various shaft arrangements (versions and directions of rotation) are possible. These are depicted schematically as a solid shaft below. The direction of rotation arrows indicate the dependency of the direction of rotation of the input and output shafts.

Type	DLH Ⅰ SH
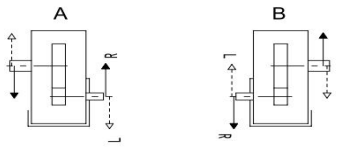	
Type	**DLH Ⅱ SH**
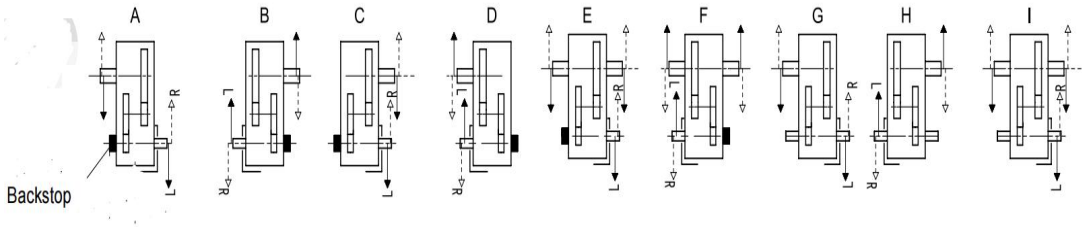	
Type	**DLHⅢSH**
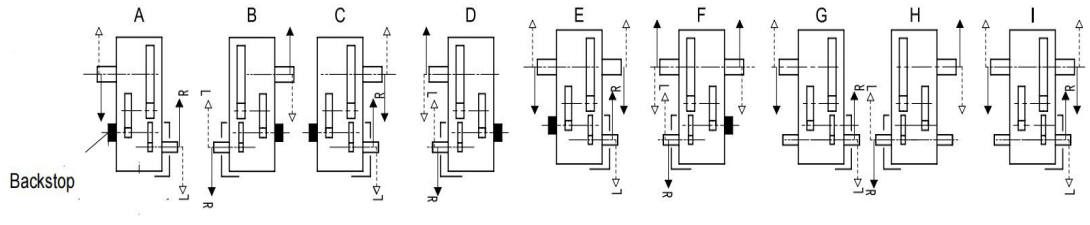	
Type	**DLHⅣSH**
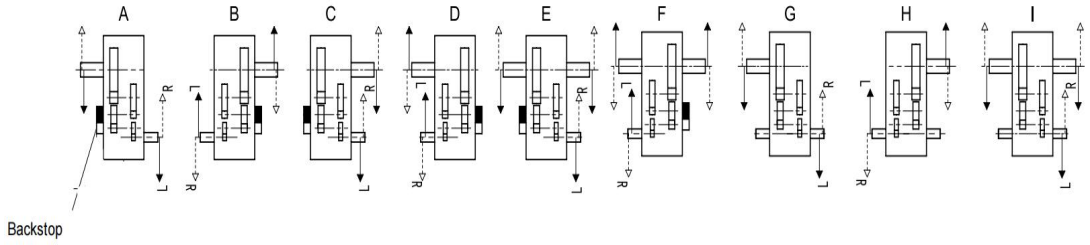	

Type	DLBⅡSH
	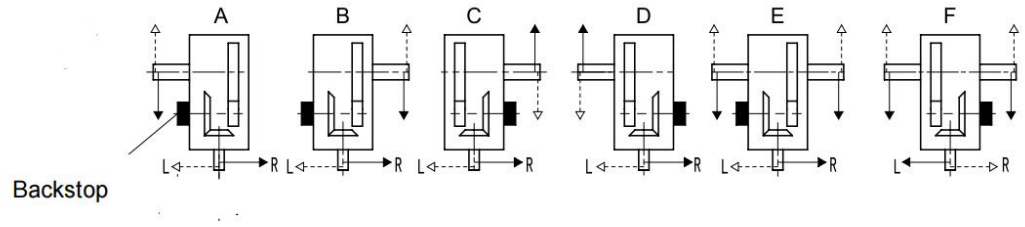
Type	**DLBⅢSH**
	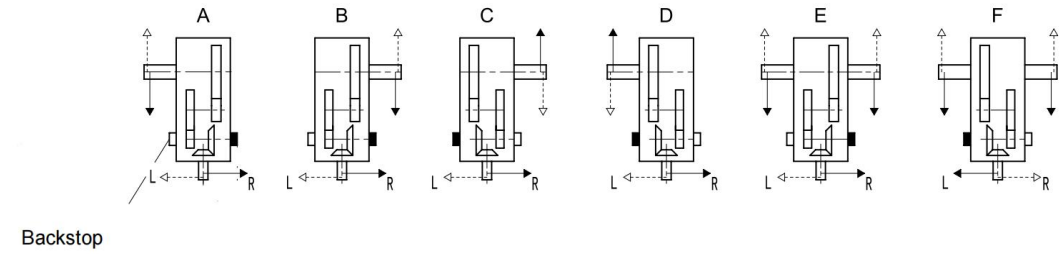
Type	**DLBⅣSH**
	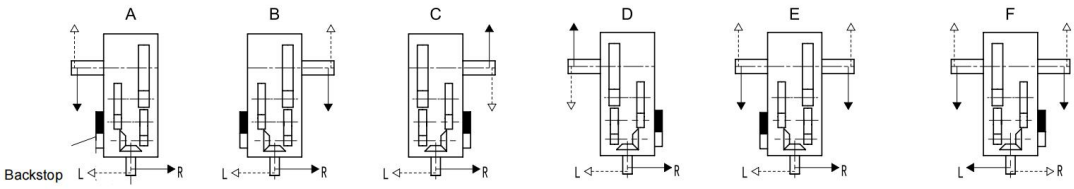

Table 3-1: Designs and associated directions of rotation

3.2 Output shaft versions

The following versions of output shaft are available:

- S = solid shaft
- H = hollow shaft
- D = hollow shaft for shrink disk
- K = hollow shaft with involute splines acc.to DIN5480
- F = flange shaft

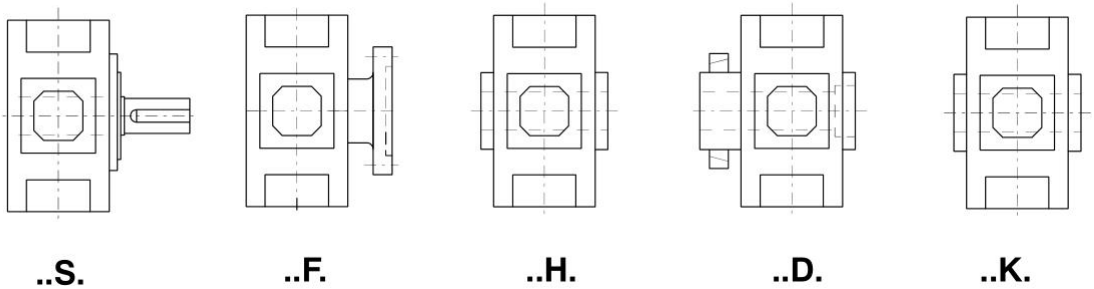

Figure 3-1: Output shaft versions

3.3 Housing

Introduction

The housing is made of cast iron. When specified, the housing can also be manufactured out of welded steel.

The gear unit housing has the following features:

- Attachment points for transporting the gear unit
- Inspection cover for inspection
- Oil filling point for refilling with oil
- Oil sight glass, oil level indicator or dipstick for checking the oil level
- Oil drain screw or oil drain valve for changing the oil
- Air filter

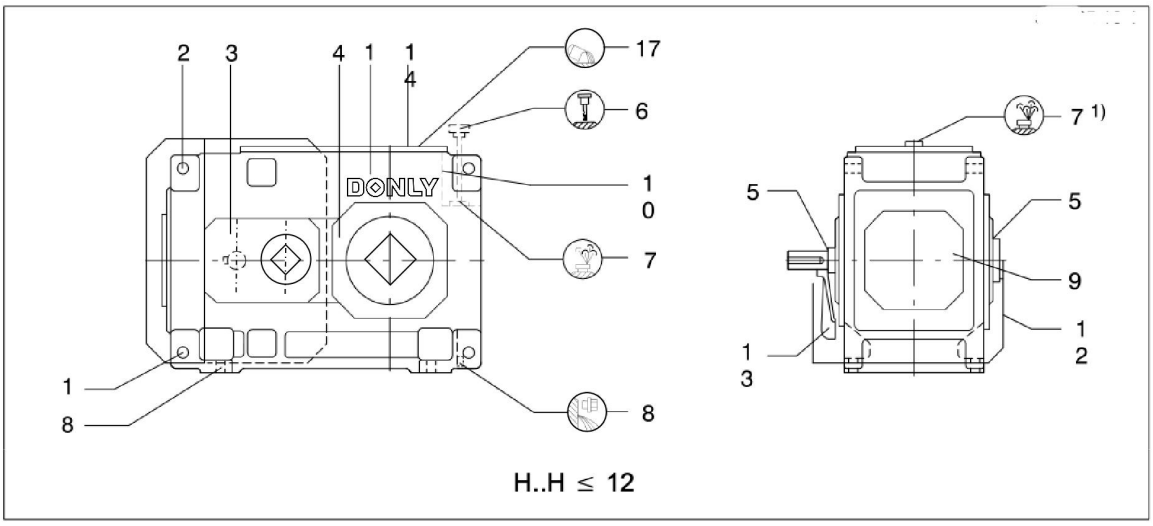

1) only for H I SH

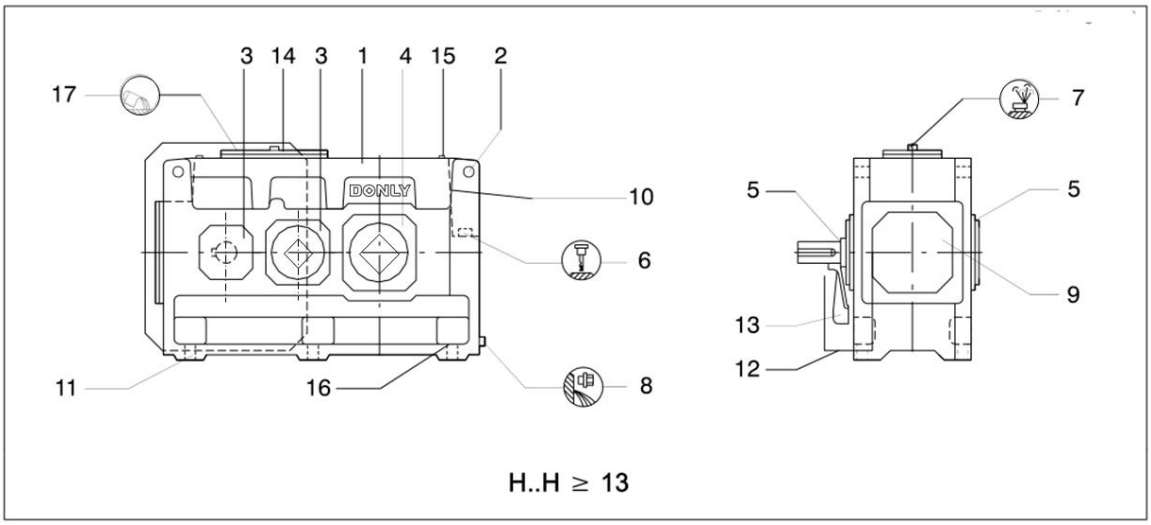

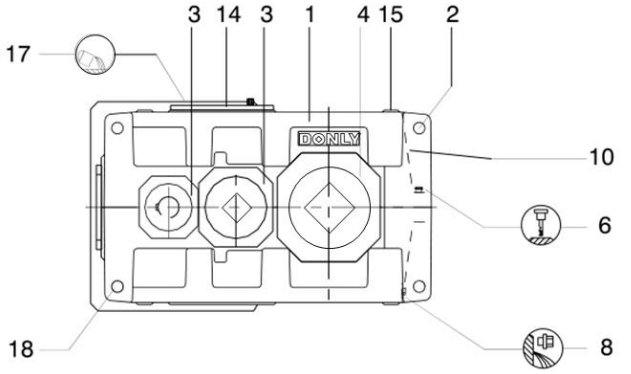

H..M ≥ 13

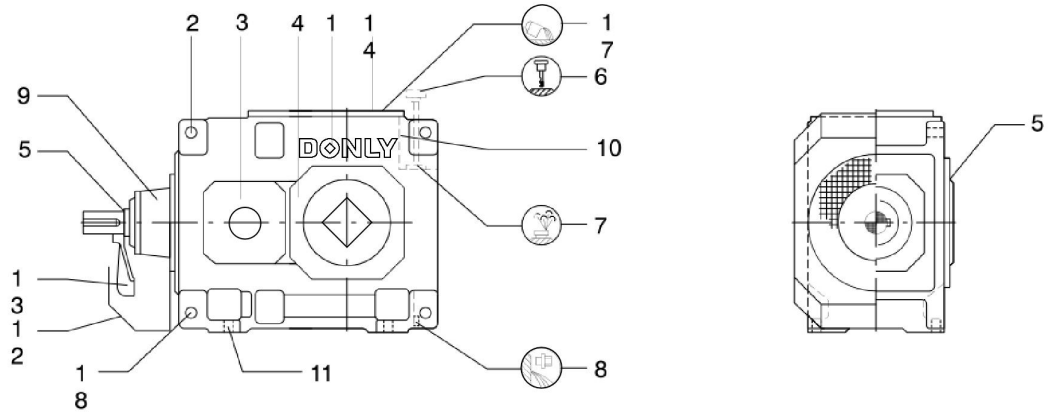

B..H ≤ 12

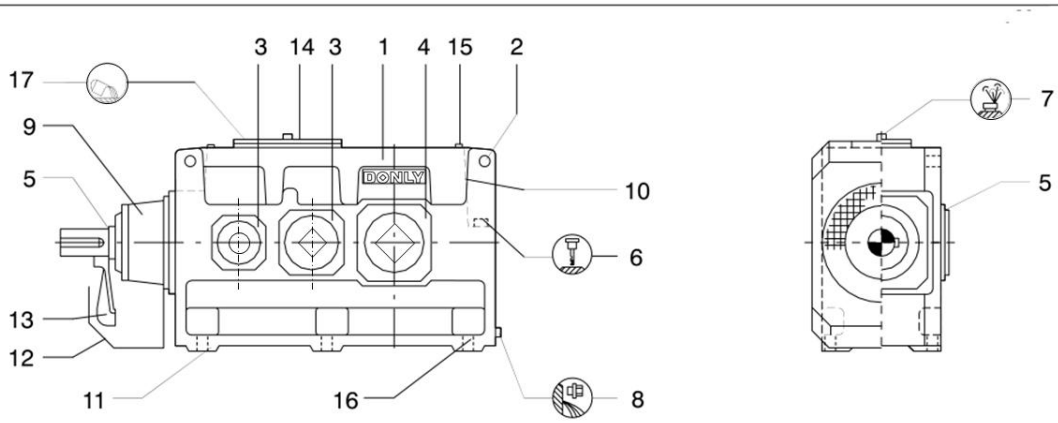

B..H ≥ 13

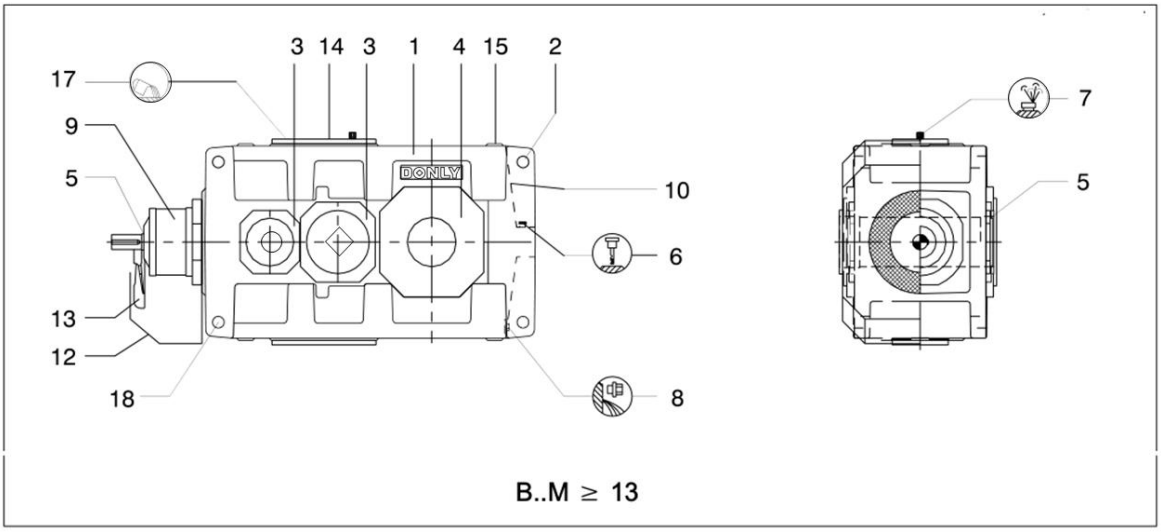

Figure 3-2: Gear unit components for gear units

1	Housing	10	Rating plate
2	Threads/transport lugs	11	Fastening
3	Cover	12	Air guide cover
4	Cover	13	Fan
5	Shaft seal	14	Housing cover
6	Oil dipstick	15	Calibration surface
7	Cover	16	Adjusting the thread
8	Air filter	17	Oil filler
9	Cover	18	Fastening for torque support

3.4 Oil supply to the gear unit

Dip lubrication

Unless otherwise agreed by contract, the gearing and rolling contact bearings are supplied with an adequate quantity of oil by splash lubrication.

3.5 Bearing arrangement of the shafts

All shafts are mounted on rolling contact bearings.

3.6 Shaft seal

Depending on requirements, shaft seals prevent oil from escaping from the gear unit or dirt from entering the gear unit.

3.6.1 Radial shaft seals

Radial shaft seals are usually used as standard seals. Radial shaft seals are suitable for low to average operating speeds.

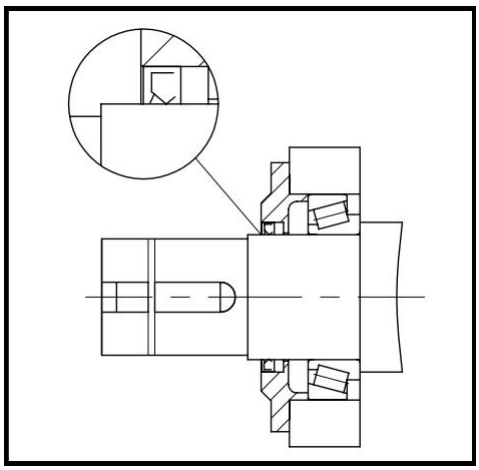

Figure 3-3: Radial shaft seals

3.6.2 Combination seals

Combination seals are suitable in dust environments. The seal is a combination of three sealing elements which protect the gear unit from ingress of dust like particles.

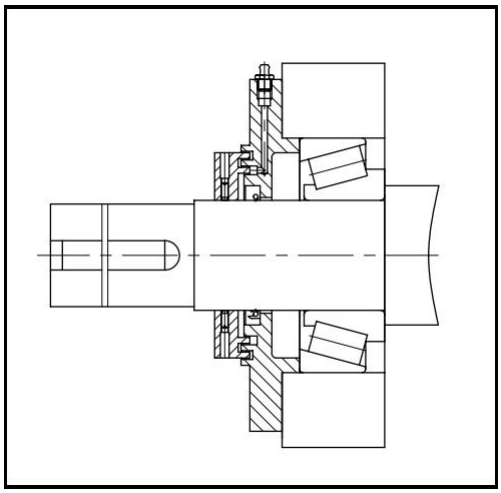

Figure 3-4: combination seals

3.7 Backstop

Introduction

For some requirements, the gear unit can be equipped with a mechanical backstop. In operation, the backstop only permits the specified direction of rotation. The direction of rotation is specified at the gear unit input and output using an arrow.

The backstop is mounted to the gear unit through an intermediate flange creating an oil tight seal; the backstop is integrated in the gear unit oil circuit.

Principle of operation

The backstop is fitted with centrifugally operated sprags. If the gear unit rotates in the specified direction, the inner ring rotates together with the sprag cage in the direction of rotation of the shaft, while the outer ring remains stationary. Above a certain speed (disengagement speed) the sprags disengage from the outer ring. In this operating state, the

backstop operates without any wear.

NOTICE

Damage to the backstop due to increased wear when operating below disengagement speeds

The backstop may be damaged due to increased wear if operated below disengagement speeds.

Regularly replace the backstop when operating the gear unit with speeds below the disengagement speed of the backstop. Data indicating the replacement intervals is provided in the dimension drawing and on a plate attached to the gear unit. This plate is attached to the gear unit housing close to the backstop.

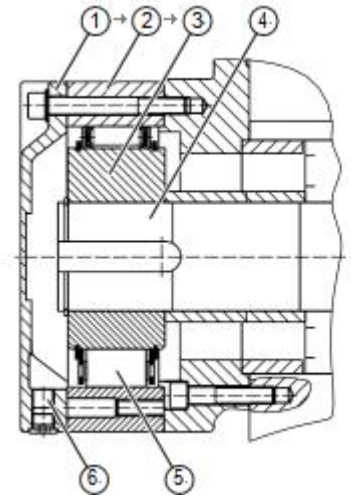

Figure 3-5: Backstop

① Cover
② Outer ring
③ Inner ring
④ Shaft
⑤ Cage with sprags
⑥ Residual oil drain

Before connecting the motor, identify the phase sequence of the three phase mains using a phase sequence instrument. Connect the motor corresponding to the defined direction of rotation.

The blocking direction of the backstop can be changed by turning over the cage. You must always contact DONLY in advance if you wish to change the blocking direction

NOTICE

Damage to the backstop and gear unit due to incorrect direction of rotation

The backstop and gear unit may be damaged if operated in the wrong direction of rotation.

Do not operate the motor adversely to the blocking direction of the gear unit. Observe the note attached to the gear unit.

3.8 Cooling

The gear unit is equipped with an axial or a radial fan depending on requirements.

3.8.1 Fan

Principle of operation

Generally, the fan is mounted on the high speed shaft of the gear unit and is protected from

accidental contact using an air guide cover. The fan draws in air through the protective grille of the air guide cover and blows it along the lateral air ducts on the gear unit housing. The fan dissipates a certain amount of heat from the housing.

Improper use can damage the gear unit. Follow the instructions given below in order to protect the gear unit against overheating:

- When you install the protective device for the coupling or similar on gear units that are equipped with a fan, make sure that you leave sufficient clearance for cooling air to be drawn into the fan.
- The required clearance is specified in the dimension drawing in the complete documentation for the gear unit.
- Make sure that the air guide cover is correctly fastened.
- Protect the air guide cover against damage by external components.
- Make sure that there is no contact between the fan and the air guide cover.
- Note that the cooling effect can be significantly impaired if the fan is dirty or if the surface of the housing is covered with dust or contaminants that act as an insulating layer.Clean the fan and the gear unit. Observe the cleaning information in chapter Maintenance and servicing work

The diagram below shows a gear unit fan:

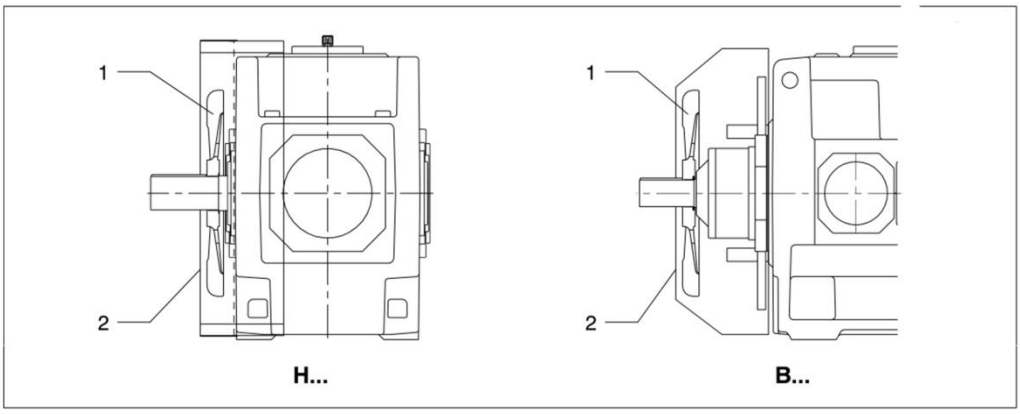

1:Fan 2:Air guide cover

3.8.2 Cooling coils

Introduction

The gear unit can be equipped with a cooling coil in the oil sump. The cooling coil is connected to a cooling water supply. The cooling water connection must be provided by the operator. The cooling water can be fresh water, sea water or brackish water.

Principle of operation

Heat from the gear unit oil is transferred to the cooling water as it flows through the cooling coil.

Information

To prevent the formation of condensation, make sure that the cooling coil is fully immersed in the oil.

Improper use can damage the cooling coil. Be sure to take the following precautions:

- Make sure that the cooling water pressure does not exceed 8 bar. The direction of water

flow through the gear unit is optional.

- Make sure that the ends of the cooling coil are not and that the reducer screws are not removed.
- If there is a risk of freezing temperatures, drain the cooling water out of the coil and blow the coil out with compressed air to remove any water residue.
- Use a suitable cooling water flow regulator (e.g.a pressure reducing valve or an appropriate isolation valve) in order to prevent excessive water pressure at the cooling water inlet.

⚠ WARNING

Risk of eye injury from compressed air

Water residue and dirt particles can cause damage to eyes.

Wear suitable safety goggles.

Further information

For further information and a detailed illustration of the gear unit and the connection dimensions, please refer to the dimension drawings in the complete gear unit documentation.

The required cooling water flow rate and the maximum permissible inlet temperature can be found in the product catalog, the list of equipment or the dimension drawing in the complete documentation for the gear unit.

3.9 Couplings

Flexible couplings or safety couplings are generally used to drive the gear unit.

Use of rigid couplings or other input or output elements that generate additional radial or axial forces (e.g. gear wheels, belt pulleys, flywheels or hydraulic couplings) must be agreed contractually.

3.10 Shrink disk

A shrink disk is provided as a frictional clamping connection between the gear unit hollow shaft and the driven machine on shaft mounted gear units.

The shrink disk allows an interference fit to be created between a hollow shaft and a stub shaft (machine shaft), referred to hereafter as "stub shaft". The interference fit is capable of transferring torques, bending moments and forces. Crucial to the successful transmission of torques and/or power is the joint pressure between the hollow and stub shafts generated by the shrink disk.

3.11 Heating

Introduction

At low temperatures, it may be necessary to preheat the gear unit oil before the drive is switched on or also during operation.

Heating elements

Heating elements can be used for these applications, for example. Heating elements convert electricity into heat and transfer this to the oil in which they are immersed. The heating elements are installed in protective tubes in the housing so that they can be replaced without draining off the oil first.

Complete immersion of the heating elements in the oil bath must be ensured by adhering to

the installation position in accordance with the dimension drawings, which are part of the complete documentation, and the oil level.

⚠ WARNING

Fire hazard

Exposed heating elements pose a fire hazard.

Only switch on the heating elements if it is absolutely ensured that they are completely immersed in the oil bath.

If heating elements are retrofitted, the heat output at the outer surface of the heating element must not exceed the maximum values stated in the table below.

The following table contains information about the specific heat output P_{HO} as a function of ambient temperature:

P_{HO} in W/cm²	Ambient temperature in °C
0.9	10 to 0
0.8	0 to -25
0.7	-25 to -50

Table 3-2: Information about the specific heat output

Since it is vital to ensure that the heating elements are fully immersed in the oil bath, the higher oil level required by rotary shaft sealing rings makes it essential that these seals are always used for applications with heating elements.

Control of the heating elements

Heating elements can be controlled by a temperature monitor. The temperature monitor provides a signal to be amplified when the minimum and maximum temperatures are reached.

3.12 Oil level indicator

The following components can be mounted to the gear unit to visually check the oil level:

- Oil sight glass
- Oil level indicator
- Oil dipstick

Check the oil level when the gear unit is stationary and with the oil in a cool state. The oil level needs to be within the maximum and minimum range.

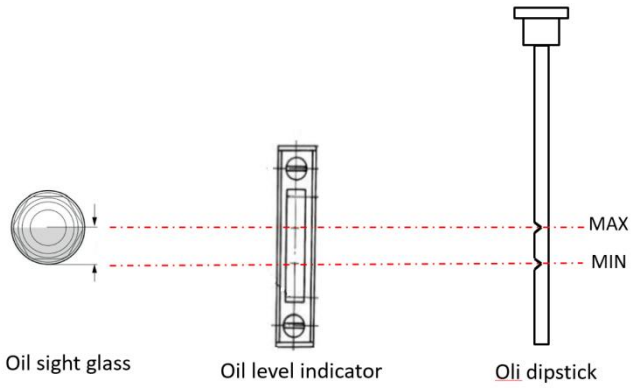

4 Application planning

4.1 Scope of delivery

The scope of delivery is listed in the shipping documents. Immediately upon receiving the gearbox, check that everything has been delivered. Report any damaged and/or missing parts to Customer Services immediately.

⚠ WARNING

Serious injury through defective product

Serious injury may occur.

If the gearbox exhibits any visible damage, you should not put it into operation.

4.2 Transport

General information

The gear unit is delivered fully assembled. Additional items such as shrink disks, couplings, oil coolers, pipework and valves may be delivered separately packaged, as necessary.

When transporting the gear unit, observe the following instructions to avoid damaging the gear unit:

- The gear unit may only be transported using suitable means of transport.
- Transport the gear unit emptied of oil and leave the gear unit on the transport packaging.
- Do not use incorrect attachment points.
- The threads in the front shaft ends must not be used for attaching lifting equipment.
- Do not use the pipework for moving the gear unit.
- Ensure that the lifting equipment is able to bear the weight of the gear unit plus a safety margin.



⚠ WARNING

Risk of crushing

There is a danger of being crushed by the component being transported if the hoisting gear and load-bearing equipment used is not suitable and the component comes loose.

When picking up loads, observe the information on load distribution on the packaging.

When transporting the product in a lifted position, proceed slowly and carefully to avoid personal injury and damage to the gear unit.

- Watch for damage while transporting the gear unit.

NOTICE

Damage to gear unit

When transporting the gear unit, the gear unit packaging or coating can be damaged.

When transporting the product in a lifted position, proceed slowly and carefully in order to avoid damage to the packaging or coating.

NOTICE

Damage to gear unit due to impacts against free shaft ends

Damage to gear unit is possible due to impacts against the free shaft ends. When transporting the product in a lifted position, proceed slowly and carefully. Avoid impact against the free shaft end.

Attaching the load

For transport, only attach the gear unit at the marked attachment points intended for this purpose.

Ensure the following measures are taken when attaching, lifting, lowering and moving the load:

- Keep within the load limits
- When using loading suspension devices with several load hooks, ensure the load is evenly distributed
- Be aware that the centre of gravity may not be in the centre
- Ensure that lifting equipment is correctly secured
- Move the equipment slowly
- Load sway and attachment of the load to objects or parts of buildings is not permissible
- Load hooks must not be loaded at the tip
- Only set down products on a flat, nonslip and strong base



⚠ DANGER

Falling loads

Danger to life from falling load due to incorrect attachment. Do not stand under suspended loads. Observe the load limits.

Packaging

The gear unit is delivered fully assembled. Any additional equipment is supplied in separate packaging where applicable.

The way the gear unit is packaged may vary, depending on the transport route and size.

The symbols which appear on the packaging must be observed.

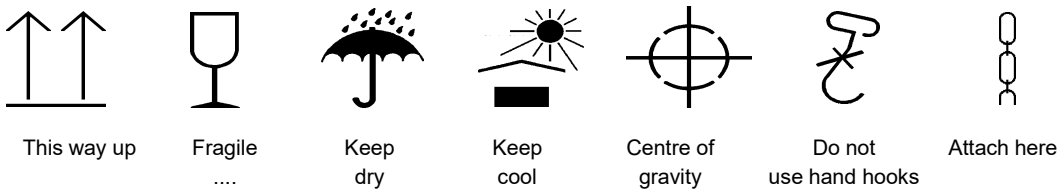

Figure 4-1: Transport symbols

4.3 Attachment points

Lifting eyes are fitted to the gear unit to assist with its transportation during manufacture and installation.

Carefully ensure that the angle of the vertical load at the gear units lifting eyes does not exceed 45°.

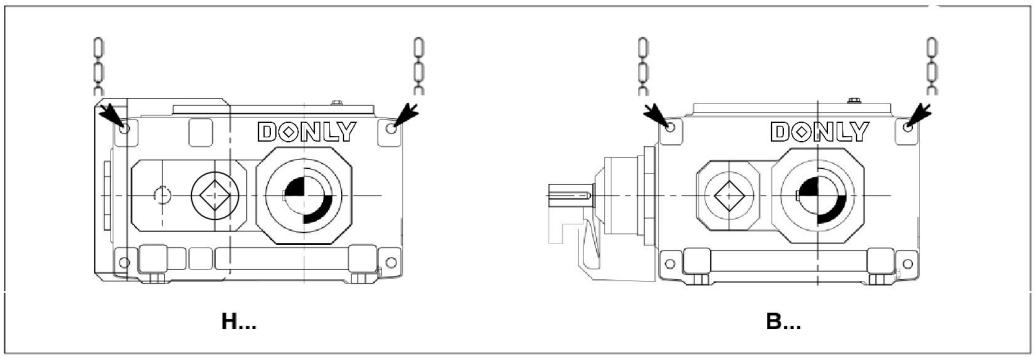

Figure 4-2: Position of the attachment points

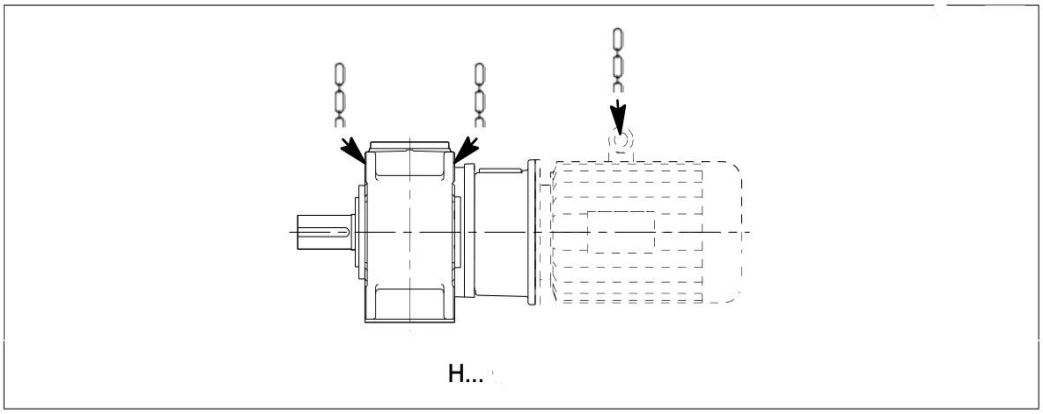

Figure 4-3: Position of the attachment points on model DLH gear units with motor.

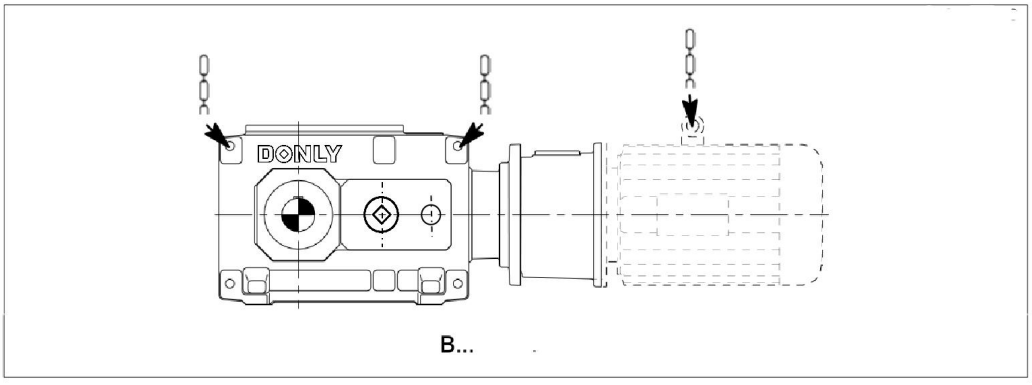

Figure 4-4: Position of the attachment points on model DLB gear units with motor

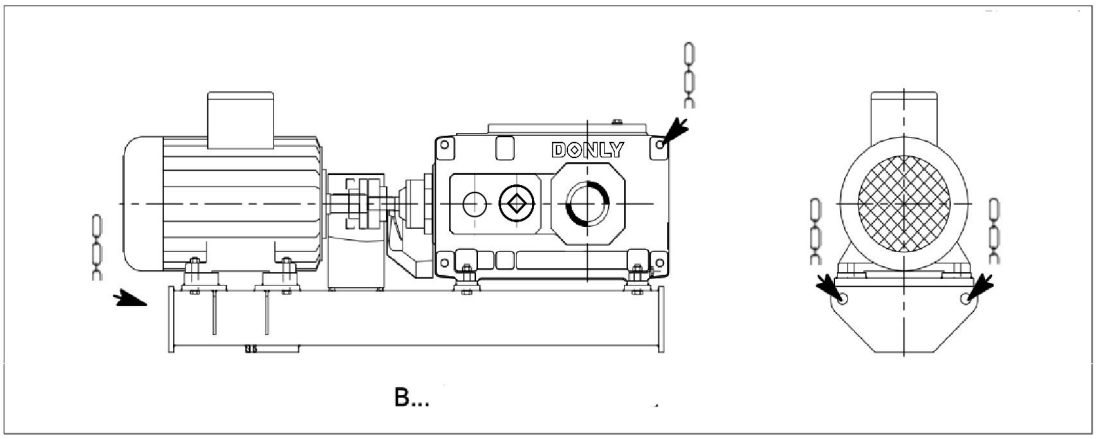

Figure 4-5: Position of the attachment points on model DLB gear units with gear unit swing base

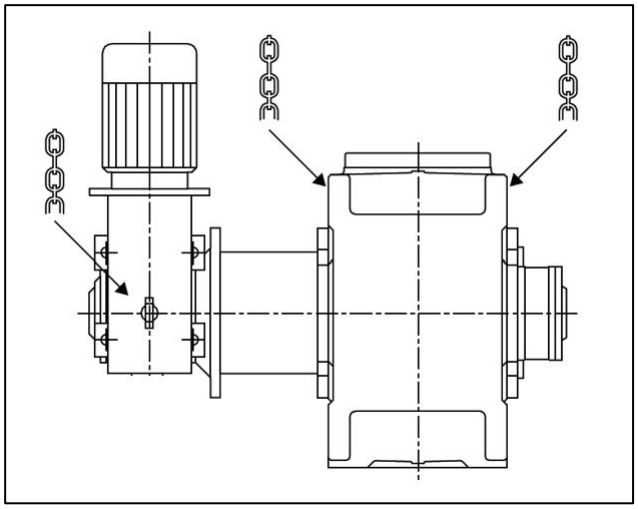

Figure 4-6: Position of the attachment points on type B3.H gear units with auxiliary drive

Drive units with additional components mounted on the gear unit (such as drive motor, coupling, etc.) may require an extra attachment point owing to the displacement in the centre of gravity caused by the mounted components.

4.4 Corrosion protection and storage conditions

Industrial gear units are delivered without oil fill. Observe the corrosion protection required for the various storage periods listed in the following table:

Storage period	Storage conditions	
	Outdoors, roofed	Indoors (dry, warm air, heated if required)
6 months	Standard protection	Standard protection
12 months	Consult with DONLY	Standard protection
24 months	Long term protection	Consult with DONLY
36 months	Consult with DONLY	Long term protection
Sea transport, storage in areas close to the sea	Consult with DONLY	Long term protection

Standard protection

- The gear unit is delivered on a palette without cover.

- Protection of the inside of the gear unit: Gear units undergo a test run with protection oil.
- Oil seals and seal surfaces are protected through bearing grease.
- DONLY applies a protective coating to unpainted surfaces, including spare parts. Before assembly or before other equipment is mounted to such surfaces, the protective coating must be removed. To do so, clean the surface with solvent.
- Small spare parts and loose pieces, such as screws, nuts, etc., are supplied in corrosion protected plastic bags.
- Threaded holes and blind holes are covered by plastic plugs.
- The corrosion protection is not intended for long term storage or for humid conditions. The operator is responsible for keeping the gear unit in corrosion free condition.
- The Air filter is already installed at the factory.

Long term protection

- The gear unit is packaged in a seaworthy plywood box and is delivered on a palette. This way, the gear unit is protected from humidity and shock. DONLY recommends a seaworthy package if the gear unit will be stored for an extended period of time or if protection against salty air is required.
- Protection of the inside of the gear unit apart from standard protection: A solvent in the form of a vapor phase inhibitor is sprayed through the oil filling hole. Inhibitors are volatile, fixed substances that saturate the ambient air with their vapor in closed rooms. If the inside of the gear unit is subjected to such an atmosphere, then an invisible VPI film forms on the components inside the gear unit. This film serves as corrosion protection. After this protection treatment, the solvent vapors (methanol, ethanol) should have evaporated before closing the gear unit. The Air filter is replaced with a screw plug. The screw plug must be screwed into the gear unit again before startup. Repeat the long term protection treatment after 24 or 36 months.
- Never open the gear unit near open flames, sparks and hot objects because the solvent vapors might be ignited.
- Take preventive measures to protect people from solvent vapors. It is absolutely crucial that open flames are avoided when the solvent is applied and when the solvent evaporates.
- DONLY applies a protective coating to unpainted surfaces, including spare parts. Before assembly or before other equipment is mounted to such surfaces, the protective coating must be removed. To do so, clean the surface with solvent.
- Small spare parts and loose pieces, such as screws and nuts are supplied in corrosion protected plastic bags.
- Threaded holes and blind holes are covered by plastic plugs.

5 Assembly

5.1 General assembly instructions

Assembly work must be performed very carefully by authorized, trained and suitably instructed personnel. Liability is excluded for damage caused by the incorrect performance of this work.

Requirements

Improper use can damage the gear unit. Take the following precautions:

- Protect the gear unit against falling objects and from becoming covered over.
- Do not perform any welding work anywhere on the drive.
- Do not use the gear unit as an earthing point for electric welding operations.
- Use all the fastening points provided in the particular unit design.
- Replace any bolts that can no longer be used with bolts of the same strength class and type.
- Make sure that sufficient hoisting gear is available.

Mounting position and attachment points

During the actual planning phase, be sure to allow for sufficient space around the gear unit to enable subsequent upkeep and maintenance work. Take suitable measures to ensure that unhindered convection across the housing surface is possible so that the gear unit does not overheat. Leave sufficient space to allow a free flow of air into gear units that are equipped with a fan.

NOTICE

Heating of the gearbox by external heat sources

The gear unit must not be heated by external heat sources (exposure to direct sunlight, for example) while it is in operation and measures must be taken where necessary to protect it.

You can take the following measures to protect the gear unit against this hazard:

- A canopy to protect against the sun
- An additional cooling device
- A temperature monitoring device with shutdown function in the oil sump

The positions of the attachment points are shown in the dimension drawing. To ensure that the unit is properly lubricated during operation, please observe the mounting position specified in the dimension drawings.

Hot spots can develop if you use a canopy to provide protection against the sun.

If you use a temperature monitoring device, it must be capable of outputting an alarm when the maximum permissible oil sump temperature is reached. It must also be capable of switching the drive off when the maximum permissible oil sump temperature is exceeded. The operator's process might be interrupted when the drive is shut down.



⚠ WARNING

Ignition of vapours emitted from solvents

There is a risk of injury due to ignition of vapours emitted from solvents during cleaning work.

Please note the following:

- Ensure sufficient ventilation.
- Do not smoke.

5.2 Unpacking the gear unit

Introduction

The scope of delivery is listed in the shipping documents.

⚠ WARNING

Severe injury caused by the content of the packing sliding

There is a risk of being crushed when opening the packing in which the component is transported.

While being transported, the content of the packing can slide.Carefully open the packing.

Wear suitable protective equipment (gloves, safety glasses).

Requirement

Check that everything has been delivered immediately upon receipt.

NOTICE

Damage to gear unit caused by corrosion

Exposing the gear unit to moisture can result in damage from corrosion.

Do not damage or open the packaging too early if the packaging is used to preserve the unit.

Procedure

To unpack and use the gear unit, please proceed as follows:

1. Remove packaging and transport devices in accordance with regulations.
2. Visually inspect for damage and dirt.
3. Report any damaged or missing parts to Customer Service immediately.
4. Dispose of packaging material and transport devices in accordance with regulations.

5.3 Gear unit assembly

5.3.1 Foundation

Properties of the foundation

The foundation must have the following properties:

- Stable
- Horizontal and level
- The foundation must be designed for torsional rigidity
- Reaction forces from the gear unit must be braced

Requirements of the foundation

The foundation must meet the following requirements:

- Construct the foundation in such a way that it does not produce any resonance vibrations and that it is isolated against the transmission of vibrations from adjacent foundations.
- Design the foundation according to the relevant weight and torque, taking into account the forces acting on the gear unit.
- Align the foundation carefully with the equipment installed on the input and output sides of the gear unit.
- Take any elastic deformation that may be caused by operating forces into account.
- Install lateral stops to prevent displacement if external forces are acting on the gear unit.

NOTICE

Lack of stability of the gear unit

Damage to the gear unit is possible if it is not mounted on a stable foundation.

Always use bolts with a minimum strength class (property class) of 8.8. Information and guidance on the tightening torque can be found in Chapter Tightening procedure

Tighten fastening screws and nuts with the specified tightening torque. When tightening the fastening bolts, make sure that the gear unit is free of mechanical stress.

5.3.2 Description of assembly work

Measures to be taken prior to assembly



⚠ CAUTION

Risk of chemical burns from chemical substances

There is a risk of chemical burns when handling aggressive cleaning agents.

Please observe the manufacturer's instructions on how to handle cleaning agents and solvents. Wear suitable protective equipment (gloves, safety glasses). Remove any spilled solvent immediately with binding agents.



⚠ WARNING

Risk of burns

There is a risk of serious burn injury from hot surfaces (>55°C).

Wear appropriate protective gloves and protective clothing.

Improper use can damage the gear unit. Take the following precautions:

- Use a suitable cleaning agent to remove the corrosion protection from the shafts.
- Do not allow the cleaning agent to come into contact with the shaft sealing rings.

- Mount the input elements (e.g. coupling parts) on the shafts and lock them securely.
- If these input elements must be fitted hot, the joining temperatures required are listed in the dimension drawings in the coupling instructions.
- Unless otherwise specified, heat the coupling parts with an induction heater, a torch or in an oven.
- Use heat shields designed to protect against radiant heat in order to safeguard the shaft sealing rings against damage or heating to above 100 °C.
- The elements must be quickly pulled onto the shaft as far as stated in the dimension drawing prepared in accordance with order specifications.

NOTICE

Risk of damage to shaft sealing rings due to heat
Shaft sealing rings can be damaged if they are heated up to over 100°C.

Use the appropriate heat shields to protect against radiant heat.

NOTICE

Damage as a result of blows or impact

Damage in the gear unit as a result of blows or impact is possible.

Pull on the coupling using the appropriate fitting tool.

Avoid damaging the shaft sealing rings and the shaft running surfaces when fitting coupling parts.

NOTICE

Poor alignment
Damage to the gear unit or individual components due to poor alignment is possible.

When installing and mounting the drives, ensure that the individual components are precisely aligned with one another.

In admissibly high alignment errors of the shaft ends to be connected as a result of angular or axial offset result in premature wear and material damage.

Base frames or substructures that are too soft can cause the coupling parts to become radially and/or axially displaced during operation. This displacement is not measurable when the drive is at a standstill.

5.3.3 Alignment

Alignment

The gear unit housing has machined surfaces (alignment surfaces) to help you align the unit horizontally in the longitudinal axis. The machine shaft determines the horizontal mounting position in the transverse axis.

⚠ DANGER

Danger to life from flying fragments

Failure to align the unit with the required degree of accuracy can cause the shaft to rupture. A ruptured shaft can result in serious or even fatal injuries.

Align the gear unit exactly so that it conforms to the specified alignment values. Damage to the gear unit or its components or mounted components is possible.

The accuracy of the alignment between the shaft axes determines the service life of the shafts, bearings and couplings to a large part. Please therefore always endeavour to achieve zero deviation in the alignment of the shaft axes (does not apply to ZAPEX couplings). See also the relevant instructions, for example, for the requirements of couplings.

Procedure

The gear unit can be equipped with alignment threads to make it simpler to align

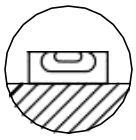

Figure 5-1: Alignment surface

Proceed as follows to align the gear unit at the alignment surface:

1. For the precise position of the alignment surfaces, refer to the dimension drawings in the complete documentation.
2. Note the values inscribed in the alignment surfaces.
3. Using these alignment surfaces, horizontally align the gear unit so that perfect gear unit operation is ensured.

The diagram below shows the alignment surfaces for gear units:

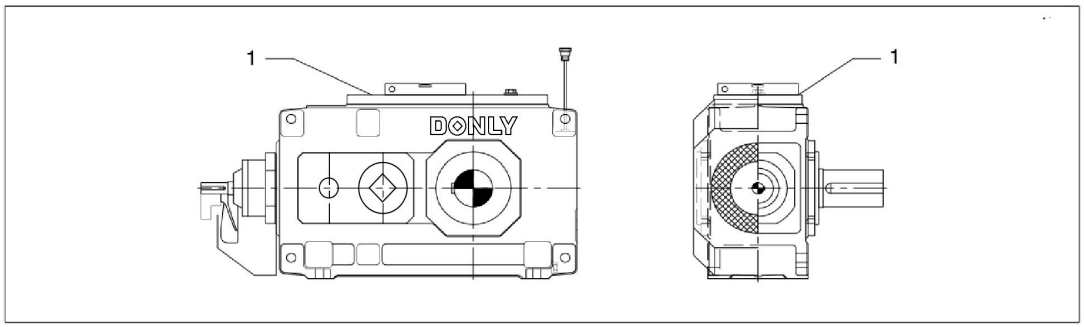

Figure 5-2: Alignment surfaces on model 3～12 gear units

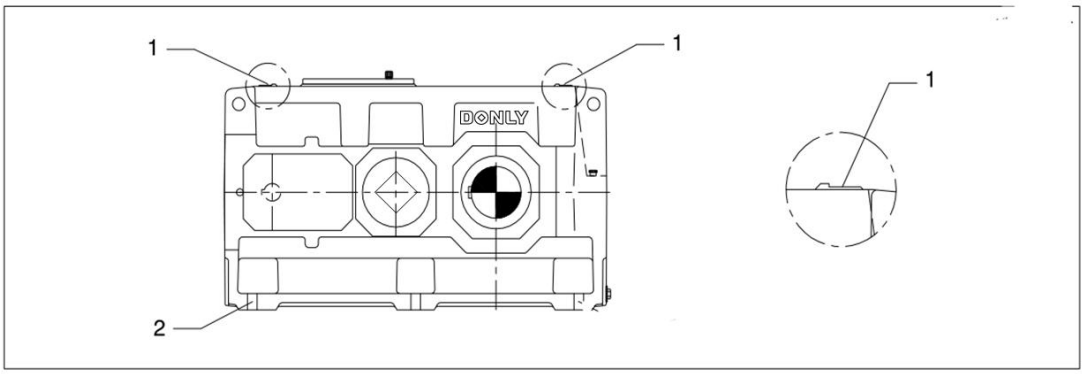

Figure 5-3: Alignment surfaces on model 13～26 gear units

1.Alignment surfaces

5.3.4 Gear unit assembly on housing foot

Introduction

If necessary, remove the air guide covers from type H1 and H2 gear units so that you can tighten the foundation fixing bolts and then reattach the covers again afterwards.

Requirements

The following requirements must be fulfilled before the assembly work commences:

- The foundation must be horizontal and level.
- When tightening the fastening bolts, make sure that the gear unit is free of mechanical stress.

Procedure

To install the gear unit on a foundation frame, proceed as follows:

1. Clean the underside of the gear unit feet.
2. Use suitable hoisting gear to set the gear unit down on the foundation frame.
3. Tighten the foundation bolts to the specified tightening torque. If necessary, install stops to prevent displacement.
4. Align the gear unit precisely with the input and output equipment.
5. Record the alignment dimensions.
6. Keep the report in a safe place together with these operating instructions.

5.3.5 Mounting on a gear unit swing base

Use of incorrect attachment points

Use of incorrect attachment points may result in damage to the gear unit. When trans porting the gear unit, only attach it at the lifting eyes provided for this purpose.
The threads in the front shaft ends must not be used for attaching lifting equipment for trans port. Lifting equipment must be able to bear the weight of the gear unit plus a safety margin.

NOTICE

Poor stability
Damage to the gear unit is possible if it is not mounted on a stable foundation.

The gear unit swing base must be absolutely horizontal and flat.

It is particularly important that the surface on which the gear unit is mounted is level because this determines the contact pattern of the teeth and the load on the bearings, and so

has an influence on the service life of the gear unit.

All points on the gear unit mounting surface must lie between two imaginary parallel planes that are 0.1 mm per 1 m apart.

Procedure

To mount the gear unit on a swing base, proceed as follows:

1. Clean the lower side of the gear unit feet and the swing base.
2. Using a suitable hoisting gear, place the gear unit down on the gear unit swing base.
3. Tighten the foot fastening bolts with the specified tightening torque (Page 83). If necessary, install stops to prevent displacement.
4. Align the gear unit precisely with the input and output equipment (Page 61).
5. Record the alignment dimensions.
6. Archive the report together with these instructions.

NOTICE

Damage caused by unevenly tightening the fastening bolts

The gear unit can be damaged by unevenly tightening the fastening bolts.

Evenly tighten the fastening bolts. When tightening the fastening bolts, make sure that the

gear unit is free of mechanical stress.

5.3.6 Bracing for gear unit swing base

NOTICE

Damage to the gear unit due to incorrectly mounting the motor and gear unit swing base

Damage to the gear unit due to incorrectly mounting the motor and gear unit swing base is possible.

The motor and swing base may only be mounted after prior consultation with DLONY. The torque arm must be attached on the machine side without resulting in any distortion or deformation.

The following diagram shows the torque arm for gear unit swing bases.

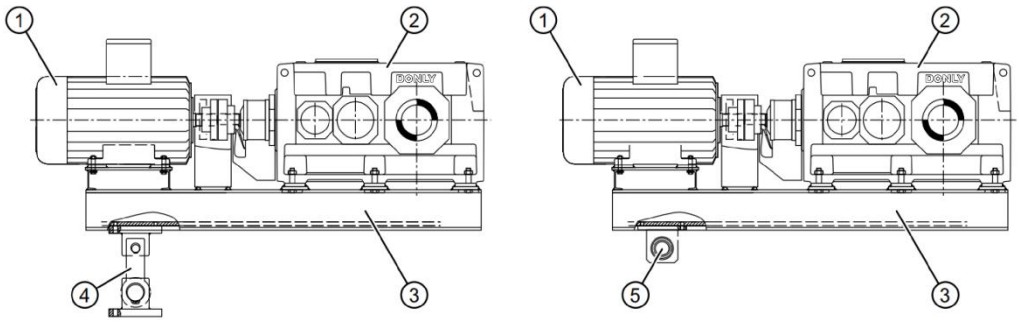

Figure 5-4: Bracing for gear unit swing base

① Motor

② Gear unit

③ Gear unit swing base

④ Torque arm

⑤ Elastic pedestal

Further information

Further information about constructing the foundation for gear units with a torque arm can be found in chapter Foundation.

5.3.7 Mounting the torque arm for the gear unit housing

Mounting the torque support

NOTICE

Damage to the gear unit due to incorrect mounting of the motor and torque support

Damage to the gear unit due to incorrect mounting of the motor and torque support is possible.

The motor and torque support may only be mounted after prior consultation with DONLY.Mount the torque support to the machine side without causing any distortion or deformation.

The diagram below shows the torque support for the gear unit housing:

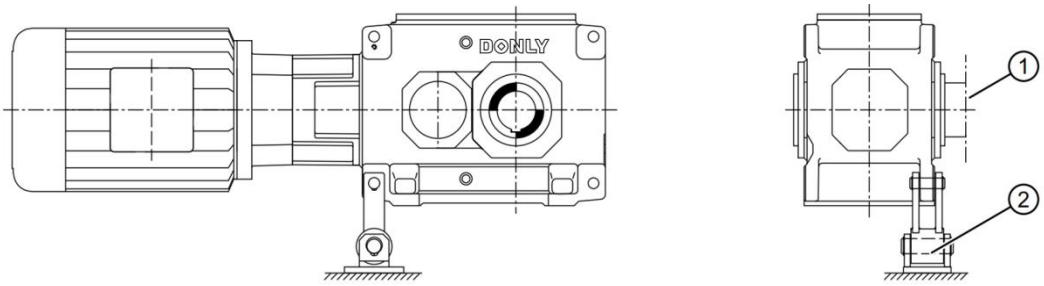

Figure 5-5: Torque support for the gear unit housing

① Machine side ② Pedestal

More information

You can find additional information about constructing the foundation for gear units with a torque support in chapter "Foundation".

5.4 Couplings

Introduction

The coupling parts might become misaligned as a result of:

- Failure to accurately align the parts during assembly
- During operation of the system:
- Due to thermal expansion
- Due to shaft deflection
- Due to machine frames that are too soft

NOTICE

Damage or destruction of the coupling through incorrect alignment

Refer to the coupling instructions for the maximum permissible displacements. Under no circumstances may these values be exceeded in operation.

Angular and radial displacement might occur simultaneously. Make sure that the total value of both displacements does not exceed the maximum permissible angular or radial displacement value of the couplings.

If couplings from other manufacturers are to be used, then, specifying the radial loads that occur, ask the manufacturer which alignment errors are permissible.

The diagram below illustrates the potential misalignments:

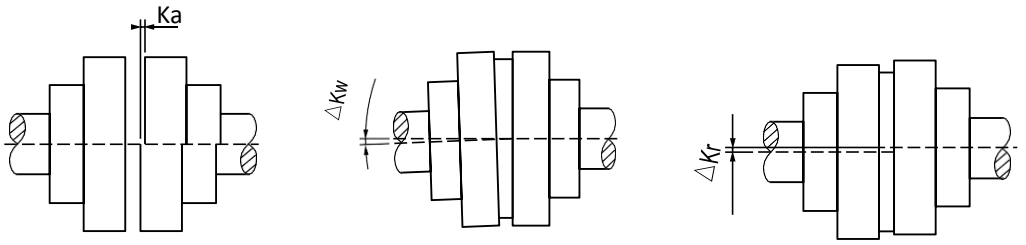

Lateral misalignment(△Ka) Angular misalignment(△Kw) Radial misalignment(△Kr)

Figure 5-6: Possible misalignments

Alignment

Alignment must be carried out in two axis planes that are vertical with respect to one another. This is possible using rulers (radial offset) and feeler gauges (angular offset) as shown in the diagram. You will achieve a greater degree of alignment accuracy by using a dial gauge or laser alignment system.

The diagram below shows the alignment process based on the example of a flexible coupling:

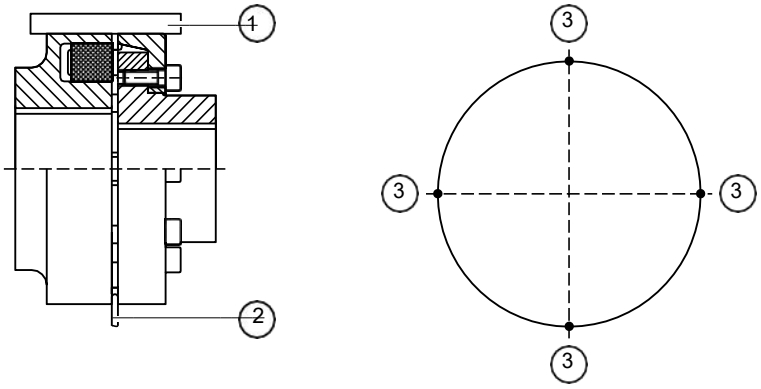

Figure 5-7: Alignment, based on the example of a flexible coupling

① Ruler
② Feeler gauge
③ Measuring points

Information

It is advisable to insert shims or metal sheets under the mounting feet to align the drive components in the vertical direction. It is helpful to use clamping claws with adjusting screws on the foundation to adjust the drive components laterally.

Information
Gear unit with motor bell housing

Couplings do not have to be aligned if the gear unit and motor are connected by a motor bell housing.

5.5 Gear unit with hollow shaft and parallel keyway

The shaft end of the driven machine shaft must have a parallel key as defined by DIN 6885, Part 1, form A.Furthermore, it should have a hole centred in its end face as defined by DIN 332, form DS (with thread). The connection dimensions for the driven machine shaft can be found in the dimension drawing in the complete documentation.

5.5.1 Preparations

To facilitate dismantling , insert a pressure oil connector into the shaft end of the driven machine until it is flush with the bore of the hollow shaft. This connector can also be used to feed in rust remover.

The following diagram illustrates the preparations required for gear units with a hollow shaft and parallel keyway:

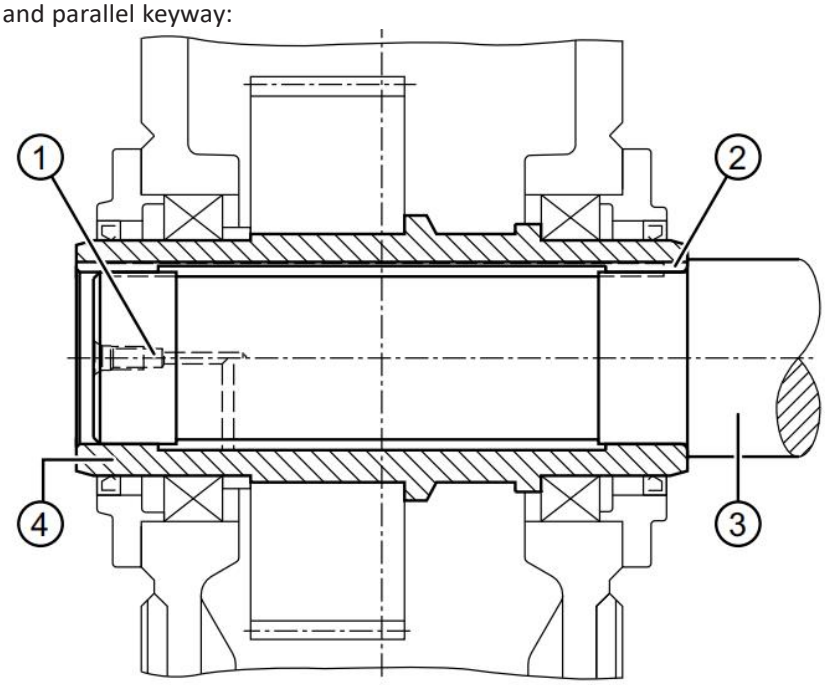

Figure 5-8: Preparations for gear units with a hollow shaft and parallel keyway

①	Pressure oil connector	③	Machine shaft
②	Parallel key	④	Hollow shaft

5.5.2 Mounting

NOTICE

Damage to the rolling-contact bearings

The rolling-contact bearings can become damaged if the gear unit skews during mounting.

The hollow shaft may be mounted on a machine shaft shoulder only if the gear unit features one of the following:

- Torque arm
- Elastic pedestal

Proceed as follows to install the gear unit:

1. Use suitable hoisting gear to lift the gear unit.
2. Mount the gear unit using the nut and screw spindle.

The gear unit is supported by the hollow shaft.

The diagram below shows the mounting process with screw spindle for gear units with a hollow shaft and parallel keyway:

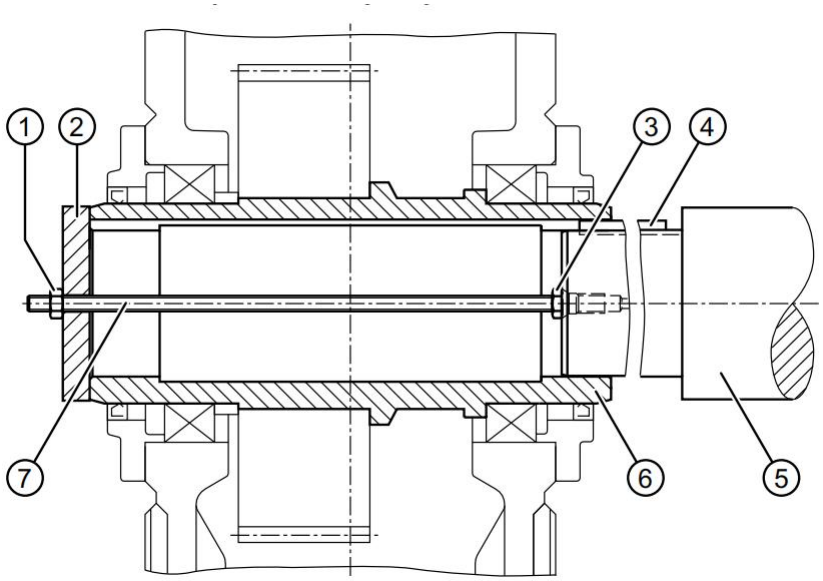

Figure 5-9: Screw spindle for gear units with hollow shaft and parallel keyway

①	Nut	⑤	Machine shaft
②	End plate	⑥	Hollow shaft
③	Nut	⑦	Screw spindle
④	Parallel key		

5.5.3 Dismantling

When using jacking screws or threaded spindles, to avoid the risk of corrosion, round off and grease the end of the thread (head) that presses against the driven machine.

The following diagram shows the dismantling procedure using an end plate for gear units with a hollow shaft and parallel keyway:

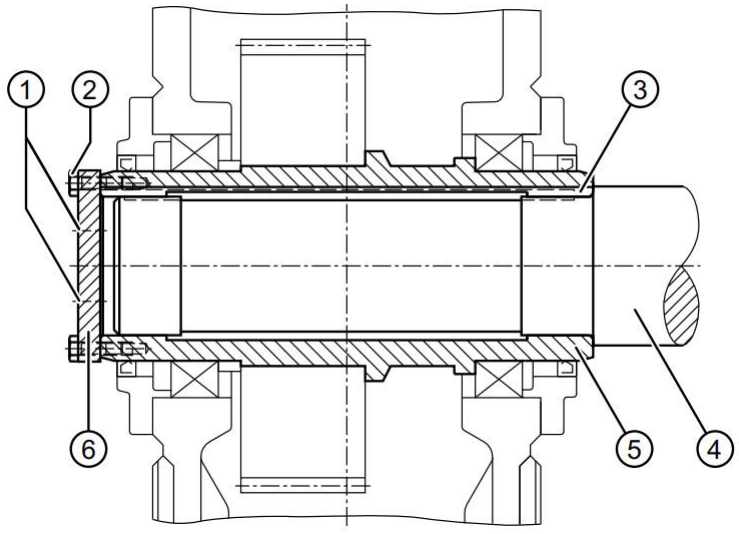

Figure 5-10: Dismantling using an end plate

①	Jacking screws	④	Machine shaft
②	Bolts	⑤	Hollow shaft
③	Parallel key	⑥	End plate for pressing out

The end plate and auxiliary plate for removing the gear unit are not supplied as standard with the gear unit. Both end faces of the hollow shaft have threaded holes for attaching the end plate to the

shaft.

5.6 Gear unit with hollow shaft and spline according to DIN 5480

The end of the driven machine shaft must have a spline according to DIN 5480. Furthermore, it should have a hole centred in its end face as defined by DIN 332, form DS (with thread). The connection dimensions for the driven machine shaft can be found in the dimension drawing in the complete documentation.
The preparations, mounting and dismantling method are similar with the shaft mounted gear unit with hollow shaft and parallel keyway. Please see chapter 5.5 for help.

5.7 Gear unit with type F flange shaft

5.7.1 Requirements

Ensure that the following measures are applied before mounting a gear unit with type F flange shaft:
• The area around the face of the flange shaft and mating flange must be absolutely free of any grease. The reliability with which torque is transmitted depends to a large extent on this.
• Do not use any contaminated solvents or soiled cleaning cloths, nor any cleaning agents that contain oil (such as petroleum or turpentine) to degrease the surfaces.

5.7.2 Installing the gear unit

To mount a gear unit with type F flange shaft, proceed as follows:
1. Clean the contact surfaces of the flange shaft and the mating flange.
2. Using suitable lifting gear, set the gear unit down on the mating flange.
3. Before tightening the fastening bolts, make sure that the locating spigots of the flanges are interlocked.
4. Tighten the connecting bolts diagonally and evenly to the specified torque.

5.8 Gear unit with hollow shaft and shrink disk

5.8.1 Preparations

The shaft end of the driven machine shaft (material C60+N or higher strength) should have a hole centred in its end face as defined by DIN 332, form DS (with thread).

5.8.2 Mounting

Make sure that the hollow shaft bore and the machine shaft are completely free of grease in the area around the shrink disk seat. The reliability with which torque is transmitted depends to a large extent on this.
Do not use any contaminated solvents or cleaning cloths and do not use any cleaning agents containing oil (e.g. petroleum or turpentine) to remove the grease.

The following diagram shows the preparation for gear units with hollow shaft and shrink disk:

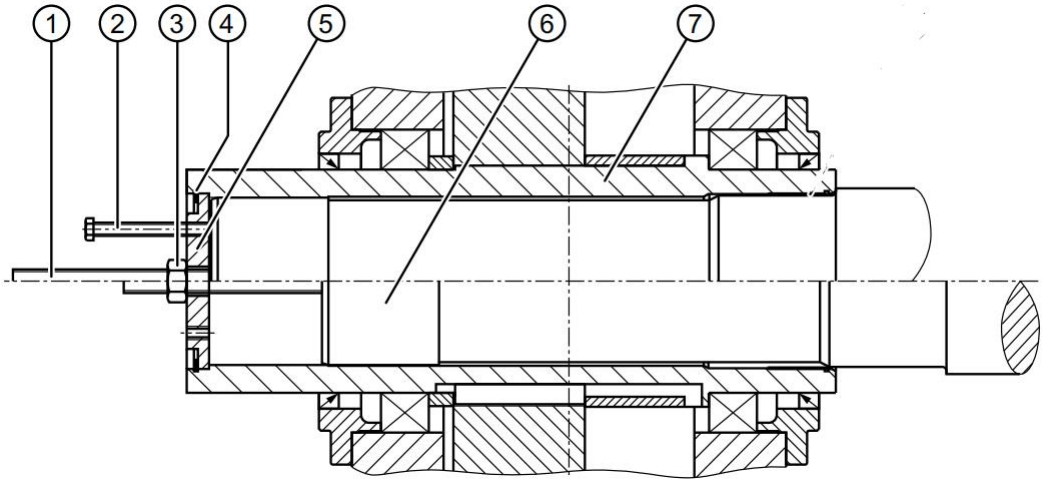

Figure 5-11: Preparation for gear units with hollow shaft and shrink disk

①	Threaded spindle	⑤	End plate
②	Jacking screw	⑥	Machine shaft
③	Nut	⑦	Hollow shaft
④	Locking ring		

Parts 1, 2 and 3 are not included in the scope of delivery.

5.8.3 Dismantling

1. Dismantle the shrink disk.
2. Lift the gear unit off the machine shaft using jacking screws until the seats under the shrink disk and the DU bushing are exposed.
3. Use a suitable hoisting gear to lift the gear unit off the machine shaft.

5.9 Connecting components

5.9.1 Gear units with mounted components

Depending on the order specification, the gear unit can be equipped with various components. Connect the closed loop control and open loop control electrical devices corresponding to the specifications of the device supplier.

5.9.2 Cooling coil connection

Procedure

To connect the cooling coil to the gear unit, proceed as follows:

1. Before connecting the cooling coil, remove the sealing plugs from the connection sleeves.
2. Flush through the cooling coil to remove any dirt or dust.
3. Connect up the cooling water inlet and drain lines. Refer to the dimension drawing for the position of the connections.

Further information

Further information about the cooling coil can be found in the complete documentation for the gear unit. Observe the information provided in chapter Cooling coils

5.9.3 Heating element connection

Procedure

To connect heating elements to the gear unit, proceed as follows:

1. Check that the heating element connection is not damaged.
2. Connect the electric wiring of the heating elements.

5.9.4 Electrical connections

Procedure



⚠ DANGER

Electric shock

Energized parts can cause an electric shock.

Ensure that the entire plant is de-energised before starting electrical installation work. Carefully observe the five safety rules.

To connect the motors and monitoring devices, proceed as follows:

1. Ensure that the connections of the motors and monitoring devices are not damaged.
2. Connect the motors and monitoring devices according to the terminal diagram and the relevant operating instructions.
3. Insulate all cable entry points (glands) at electrical equipment as required for the environment in which the equipment will operate.

5.10 Tightening procedure

5.10.1 Introduction

Bolts

The bolts must have the following properties:

- Made of steel
- Black-annealed or phosphatised
- Lightly oiled (do not add additional oil)



Information

Replacing bolts

Replace any bolts that are no longer fit for use by bolts of the same type and strength class.

Mating threads

The mating threads must have the following properties:

- Made of steel or cast iron
- Dry, cut threads

Information

Using a lubricant

As a rule, lubricants may not be used, because this can result in the bolt connection becoming overloaded.

5.10.2 Bolt connection classes

For screwing fastening bolts, note the information in the following table:

Fastening of	Bolt connection class	Range of the torque exerted by the tool	Tightening procedure
Gear unit Motor Brake Torque support	C	± 5% to ± 10%	• Hydraulic tightening with mechanical screwdriver • Torque controlled tightening with a torque spanner or a signal emitting torque spanner • Tightening with a precision mechanical screwdriver with dynamic torque measurement
	D	± 10% to ± 20%	• Torque controlled tightening with mechanical screwdriver
Protective cover Canopy	E	± 20% to ± 50%	• Tightening with an impact wrench or impact driver, without adjustment checking device • Tightening by hand, using a spanner without torque measuring device

Table 5-1: Information on screwing fastening bolts

5.10.3 Tightening torques and preload forces

The specified bolt connections must be tightened to the torques stated in the table below.

The tightening torques apply to friction values of μ_{total} = 0.14.

The following table lists the preload forces and tightening torques for bolt connections, strength classes 8.8; 10.9; 12.9:

Nominal thread diameter	Strength class of the bolt	Preload force for bolt connection classes from table in the Chapter "Bolt connection classes"			Tightening torque for bolt connection classes from table in the Chapter "Bolt connection classes"		
d mm		C	D	E	C	D	E
		$F_{M\ min.}$ N			M_A Nm		
M10	8.8	18000	11500	7200	44.6	38.4	34.3
	10.9	26400	16900	10600	65.4	56.4	50.4
	12.9	30900	19800	12400	76.5	66.0	58.9
M12	8.8	26300	16800	10500	76.7	66.1	59.0
	10.9	38600	24700	15400	113	97.1	86.6
	12.9	45100	28900	18100	132	114	101
M16	8.8	49300	31600	19800	186	160	143
	10.9	72500	46400	29000	273	235	210
	12.9	85000	54400	34000	320	276	246
M20	8.8	77000	49200	30800	364	313	280
	10.9	110000	70400	44000	520	450	400
	12.9	129000	82400	51500	609	525	468
M24	8.8	109000	69600	43500	614	530	470
	10.9	155000	99200	62000	875	755	675
	12.9	181000	116000	72500	1020	880	790
M30	8.8	170000	109000	68000	1210	1040	930
	10.9	243000	155000	97000	1720	1480	1330
	12.9	284000	182000	114000	2010	1740	1550
M36	8.8	246000	157000	98300	2080	1790	1600
	10.9	350000	224000	140000	2960	2550	2280
	12.9	409000	262000	164000	3460	2980	2670
M42	8.8	331000	212000	132000	3260	2810	2510
	10.9	471000	301000	188000	4640	4000	3750
	12.9	551000	352000	220000	5430	4680	4180
M48	8.8	421000	269000	168000	4750	4090	3650
	10.9	599000	383000	240000	6760	5820	5200
	12.9	700000	448000	280000	7900	6810	6080

Nominal thread diameter	Strength class of the bolt	Preload force for bolt connection classes from table in the Chapter "Bolt connection classes"			Tightening torque for bolt connection classes from table in the Chapter "Bolt connection classes"		
d		C	D	E	C	D	E
mm		$F_{M\ min.}$ N			M_A Nm		
M56	8.8	568000	363000	227000	7430	6400	5710
	10.9	806000	516000	323000	10500	9090	8120
	12.9	944000	604000	378000	12300	10600	9500
M64	8.8	744000	476000	298000	11000	9480	8460
	10.9	1060000	676000	423000	15600	13500	12000
	12.9	1240000	792000	495000	18300	15800	14100
M72x6	8.8	944000	604000	378000	15500	13400	11900
	10.9	1340000	856000	535000	22000	18900	16900
	12.9	1570000	1000000	628000	25800	22200	19800
M80x6	8.8	1190000	760000	475000	21500	18500	16500
	10.9	1690000	1100000	675000	30500	26400	23400
	12.9	1980000	1360000	790000	35700	31400	27400
M90x6	8.8	1510000	968000	605000	30600	26300	23500
	10.9	2150000	1380000	860000	43500	37500	33400
	12.9	2520000	1600000	1010000	51000	43800	39200
M100x6	8.8	1880000	1200000	750000	42100	36200	32300
	10.9	2670000	1710000	1070000	60000	51600	46100
	12.9	3130000	2000000	1250000	70000	60400	53900

Table 5-2: Preload forces and tightening torques

5.11 Final work

Once all the components have been assembled or connected, perform the following final work:

- Check whether all devices dismantled for transportation have been reassembled.
- Check all bolt connections for tightness after installation of the gear unit has been completed.
- Check the alignment after tightening the fastening elements. The alignment must not have changed in any way.
- Lock the oil drainage valves against accidental opening.
- Protect the gear unit against falling objects.
- Check that the guards over rotating parts are securely fastened. Contact (accidental or deliberate) with rotating parts is not permitted.

6 Commissioning

6.1 Measures prior to commissioning

Take the following measures before commissioning the gear unit:

- Read and observe the instructions.
- Replace the screw plug with the air filter or the wet-air filter.
- Gear units with backstop: Observe the appropriate measures prior to commissioning gear units equipped with backstop.
- Gear unit with auxiliary drive: Take the appropriate measures before commissioning gear units with an auxiliary drive.
- Fill the gear unit with oil.
- Gear unit with oil supply system: Check that the oil supply system is working properly.
- Check the oil level.
- Check the gear unit for leaks.
- Ensure that all pipes and components are filled with oil.

6.1.1 Gear unit with backstop

Take the following measures before commissioning the gear unit with backstop:

- Fill the backstop with oil .
- Check that the backstop can be easily rotated in the freewheeling direction without having to exert excessive force. When doing his, observe the direction of rotation arrows at the gear unit.
- Before connecting the motor, identify the phase sequence of the three-phase mains. Connect the motor corresponding to the defined direction of rotation.

NOTICE

The backstop and the gear unit can be damaged

If you operate the gear unit adversely to the blocking direction of the backstop, the backstop and the gear unit can be damaged.

Do not operate the gear unit adversely to the blocking direction of the backstop. Observe the information on the plate attached to the gear unit.

6.1.2 Gear unit with auxiliary drive

Implement the following measures before commissioning the gear unit with auxiliary drive:

- Please observe the information provided in the instructions for the auxiliary drive.
- Fill the overrunning clutch with oil via the intermediate flange. Use the same oil type and viscosity as for the gear unit itself.
- If required, release the brake on the auxiliary motor.
- Check that the overrunning clutch can be easily rotated in the freewheeling direction without having to exert excessive force.
- To do this, rotate the motor shaft of the auxiliary drive in the direction opposite to that of

the rotation arrow on the gear unit.

- Before connecting the auxiliary motor, identify the phase sequence of the three-phase mains.
- Connect the auxiliary motor corresponding to the defined direction of rotation.
- Electrically interlock the main motor and the auxiliary motor so that only one of the two motors can be switched on.
- For a maintenance drive: Check the shutdown function of the speed monitoring .

6.1.3 Gear units with cooling coil

Implement the following measures before commissioning the gear unit with cooling coil:

- Check that connecting pipes are firmly seated and tight.
- Open wide the shutoff valves in the coolant inflow and outflow lines of the coolant system.
- Make sure that the pressure in the cooling coil does not exceed the maximum permissible pressure.
- Make sure that the temperature of the cooling water is not higher than the maximum permissible value.

6.1.4 Gear units with oil supply system

Implement the following measures before commissioning the gear unit with oil supply sys-tem:

- Ensure that the maximum permissible pressure in the oil supply system components is not exceeded.
- Ensure that the maximum permissible temperature of the oil supply system components is not exceeded.

6.1.5 Gear units with heating

Please observe the following measures to commission the gear unit with heating:

- Ensure that the heating elements are not exposed.
- Check the switching points of the temperature monitor.

⚠ WARNING

The oil sump can catch fire

The oil sump can catch fire if exposed heating elements are switched on.

Never switch on the heating elements until you have checked that they are completely immersed in the oil bath.

6.2 Measures during commissioning

Take the following measures when commissioning the gear unit and document them:

- Check the oil level.
- Measure the oil sump temperature after the gear unit has run in.
- Check the tightness of the shaft seal on the gear unit.
- Check that all rotating parts are free to move.
- Check whether the shutoff valves are open.

- Check that all of the oil drain valves are closed.
- Ensure that all of the other shutoff valves are open.
- Check that the connecting pipes are firmly seated and tight.
- For gear units with bearing monitoring based on vibration measurement: Measure the vibration levels of the rolling contact bearings to create initial and comparison values.
- When commissioning, the pressure monitor signal should be bypassed for approximately 20 seconds. This is necessary as the pressure in the gear unit must first stabilise.

7 Operation

7.1 Operating data

Introduction

To ensure correct, trouble free operation of the system, observe the operating values of the gear unit. The operating value specified in the Appendix “Technical data” apply.

The following operating values apply to the oil and cooling water:

Maximum operating temperature	90°C	applicable for mineral oil, API groups I or II, and saturated synthetic ester
Maximum operating temperature	100°C	applicable for semi-synthetic oils,API group III,PAO and PG oils
Water pressure of the cooling coil or the water-oil cooler	<0.8 bar	

Table 7-1: Operating values

7.2 Irregularities in operation

Introduction

Switch off the drive aggregate immediately if it exhibits irregular behaviour during operation.

A few irregularities are listed below as examples:

- Oil temperature exceeds the maximum permissible value
- Alarm tripped by the pressure monitor in the oil cooling system or oil supply system
- Unusual operating noise

NOTICE

Faults can cause damage to the gear unit

The gear unit might sustain damage if it is not shut down when a fault occurs.

Switch off the drive aggregate immediately if any fault occurs.

Rectifying irregularities in operation

Proceed as follows to rectify any irregularities in operation:

1. Switch off the drive aggregate if it exhibits irregular behaviour during operation
2. Refer to the “Fault information” to find the cause of the fault.
3. If you still cannot determine the cause of the fault, contact DONLY Customer Service .

7.3 Taking the unit out of service

If you take the unit out of service for a prolonged period, you must take the following measures depending on the length of time that the gear unit will remain out of service:

- Switch off the drive aggregate.
- For gear units with cooling coil:
- Drain the water from the cooling coil if there is a risk of frost.
- Close the shutoff valves for the cooling water inlet and drain lines.
- Take measures to preserve the gear unit if it is to be out of service for a prolonged period.

8 Servicing

8.1 General maintenance information

The operator must ensure compliance with the stipulated time limits. This also applies if the maintenance activities are included in the operator's internal maintenance schedules.

The gear unit could be damaged if the stipulated intervals for maintenance and servicing work are not observed.

The time limits stipulated in the maintenance schedule are largely dependent on the conditions of use of the gear unit. For this reason, it is only possible to state average time limits here. These refer to the following conditions of use:

- Daily operating time 24 h
- Duty cycle "ED" 100%
- Gear unit input speed 1500 rpm
- Permissible average oil temperature



⚠ WARNING

Danger to life when the system is switched on

Working on a gear unit while it is in operation is hazardous and can result in potentially fatal injuries.

Always shut down the gear unit and any oil supply system (whether separate or mounted on the gear unit) before you carry out any work. Take measures to prevent the accidental restarting of the drive aggregate. Attach a notice stating clearly that work is being performed on the gear unit.

8.2 Maintenance schedule

Maintenance and servicing activities

The following table provides an overview of all maintenance and servicing activities which you are required to perform continuously or at regular intervals.

Intervals and time limits	Measures
As required	Replace the wet-air filter Clean the air filter Clean the fan and gear unit
Plate on the gear unit, gear unit dimension drawing	Replace the backstop Replace the overrunning clutch
Daily	Check the oil temperature Check the oil pressure (if pressure lubrication is fitted) Check for changes in the gear unit noise Check for leaks Check the water pressure

Intervals and time limits	Measures
Monthly and prior to every startup	Check the oil level
400 operating hours after commissioning	Check the water content of the oil Change the oil (or depending on results of the oil sample test) Check that the fastening bolts are tight
Every 3 months	Check the speed monitoring of the auxiliary drive Check the auxiliary drive Clean the oil filter Clean the air filter
Every 3,000 operating hours	Measure the vibration levels of the rolling-contact bearings
Every 3,000 operating hours, at least every 6 months	Regrease combined seals Measure the vibration levels of the rolling-contact bearings
Every 5,000 operating hours, at least every 10 months	Replenish grease in the oil retaining pipe
Every 12 months	Check the friction linings of the torque-limiting backstop Inspect the hose lines Inspect the shrink disk Check the water content of the oil
Every 10,000 operating hours, at least every 2 years	Change the oil if using API Groups I or II mineral oils, or saturated synthetic ester (or depending on the result of oil sample test) Check the condition of the air-oil cooler (the same time as you change the oil) Check the condition of the water-oil cooler (the same time as you change the oil)
Every 2 years	Carry out a general inspection of the gear unit Check the cooling coil Check that the fastening bolts are tight Clean the fan and gear unit
Every 20,000 operating hours, at least every 4 years	Change the oil if using semi-synthetic oil of API Group III, PAO or PG oil (or depending on the result of the oil sampling)
6 years after the stated date of manufacture	Change the hoses

Table 8-1: Maintenance and servicing activities

8.3 Maintenance and servicing work

8.3.1 Cleaning the venting screw

Cleaning interval

For dust deposits, you must clean the air release screw before the minimum interval of 3 months expires.

⚠ CAUTION

Compressed air can cause injuries

There is a risk of eye injury when using compressed air.

Wear suitable safety glasses.

Procedure

Proceed as follows to clean the air release screw:

1. Remove the air release screw.
2. Do not allow foreign matter to enter the gear unit.
3. Wash the air release screw with cleaning solvent or a similar cleaning agent.
4. Dry the air release screw and blow it out using compressed air.

8.3.2 Checking the oil temperature

Damage to the gear unit due to excessively high oil sump temperatures

The gear unit can sustain damage due to insufficient lubrication if you allow it to operate at oil sump temperatures above the maximum permissible temperature.

Do not operate the gear unit above the maximum permissible oil sump temperature.

Procedure

Proceed as follows to check the oil temperature:

1. Allow the gear unit to reach its normal operating temperature.
2. Operate the gear unit with the maximum driven machine power.
3. Measure the temperature of the oil in the oil sump.
4. Compare the measured value with the maximum permissible oil temperature .
5. Immediately stop the gear unit if the maximum permissible oil temperature is exceeded. Contact DONLY Customer Service .

8.3.3 Replacing the backstop

Introduction

If you operate the gear unit at speeds below the disengagement speed of the backstop, then you must regularly replace the backstop.

The replacement intervals are provided in the dimension drawing and on a plate attached to the gear unit. This plate is attached to the gear unit housing close to the backstop.

Procedure

Proceed as follows to replace the backstop:

1. Replace the backstop.
2. Fill the new backstop with oil .

8.3.4 Cleaning the fan and gear unit

Introduction

The gear unit can sustain damage due to inadequate cooling if you operate it with a dam aged or soiled fan. Depending on the conditions at the site of installation, it may therefore be necessary to clean the fan and gear unit more frequently than stipulated in the maintenance schedule.

Procedure

Proceed as follows to clean the fan and gear unit:

1. Remove the air guide cover.
2. Use a hard brush to remove any stubborn dirt from the impeller, air guide cover and protective grille. Never use a high pressure cleaning device.
3. Remove any spots of corrosion.
4. Reinstall the air guide cover.
5. Make sure that the air guide cover is correctly fastened.
6. Make sure that there is no contact between the fan and the air guide cover.

8.3.5 Checking the cooling coil

Introduction

A soiled cooling coil can cause damage to the gear unit. It is therefore important to check the cooling coil regularly.

Procedure

To check the cooling coil, proceed as follows:

1. Shut off the cooling water supply.
2. Disconnect the cooling water inlet and drain lines from the cooling coil.
3. Inspect the inner surface of the cooling coil for deposits.
4. If you discover that there are heavy deposits inside the cooling coil, arrange for the cooling water or the deposits to be analyzed.
5. Analysis services of this kind are offered by specialist chemical cleaning companies. These companies also sell special cleaning agents for removing deposits. Before you use a cleaning agent, check whether it is suitable for use on the cooling coil materials. You must consult DONLY Customer Services. Carefully read the instructions for use supplied by the manufacturer before using different kinds of cleaning agent.
6. If the cooling coil is severely soiled, it must be replaced by a new one. Please consult DONLY Customer Services for further advice.
7. Reconnect the cooling water inlet and drain lines to the cooling coil.

NOTICE

Build-up of heat due to soiled cooling coils

Overheating can damage the gear unit.

When the cooling coil is severely soiled, it can no longer be guaranteed to cool the gear unit effectively. In such cases, you must chemically clean the inside of the cooling coil or have it replaced with a new one.

8.3.6 Inspecting the shrink disk

Introduction

The shrink disk inspection is limited to a visual assessment of its condition.

Aspects of the inspection

Observe the following points when inspecting the shrink disk:

- Loose bolts
- Damage due to use of force
- Inner ring flush against the outer ring

8.3.7 Check that all of the fastening bolts are tight

Procedure

Proceed as follows to check that the fastening bolts are tight:

1.Observe the data regarding connection classes , preload forces and tightening torques .

2.Replace any bolts that are no longer fit for use by bolts of the same strength class and type.

8.3.8 General inspection of the gear unit

General inspection of the gear unit by Customer Services

Arrange for DONLY Customer Services to perform a general inspection on the gear unit.

Thanks to their experience, these engineers are best placed to assess which gear unit components need to be replaced.

8.3.9 Final work

After you have finished all the work listed in the maintenance schedule, replace any bolts that are no longer fit for use by bolts of the same strength class and type.

8.4 Possible faults

The faults listed below are only intended as a troubleshooting guide.

If any faults occur while the unit is still under warranty, do not allow anyone except DONLY Customer Service to attempt a repair.

Even after the warranty period has expired, you should still arrange for faults to be rectified by DONLY Customer Service.

Information loss of warranty
You will invalidate the warranty for the gear unit if you modify it in any way without seeking the approval of DONLY beforehand, or if you do not use original replacement parts.

Only use original replacement parts from DONLY. Always arrange for DONLY Customer Service to repair any faults that develop while the unit is still under warranty.

Possible faults and how to rectify them

The following table provides an overview of the possible faults and how to rectify them.

Possible faults	Causes	Possible remedies
Pressure monitor triggers an alarm. (For gear units with pressure lubrication or air-oil cooler).	Oil pressure has dropped below minimum value	• Check the oil level at room temperature • Top up with oil if necessary • Check the oil pump • If required, replace the oil pump • Check the oil filter and coarse filter • If required, replace the oil filter or clean the coarse filter
Grease escaping at the output shaft	Defective rotary shaft sealing rings	• Inspect the rotary shaft sealing rings and replace if necessary
Noise	Damage to the gear teeth	• Contact Customer Service • Inspect the gear components • If necessary, replace damaged components
	The bearing play is excessive	• Contact Customer Service • Adjust bearing play
	Defective rolling contact bearings	• Contact Customer Service • Replace defective rolling contact bearings
	Gear unit fastening has worked loose	• Tighten bolts and nuts to the specified tightening torque • Replace damaged bolts and nuts
Outer surface of gear unit soiled with oil	Inadequate sealing of the housing cover or joints	• Seal housing cover or joints
	Labyrinth seals soiled with oil, incorrect transport position	• Check oil filling • Clean the labyrinths
Main drive motor does not start	Motor direction of rotation incorrect	• Change polarity of motor
	Backstop cage with sprags incorrectly installed or defective	• Contact Customer Service • Rotate the backstop cage 180° or replace

Possible faults	Causes	Possible remedies
	Overrunning clutch blocked	• Contact Customer Service • Replace the overrunning clutch
	Overrunning clutch cage with sprags incorrectly installed and/or defective.	• Contact Customer Service • Rotate the overrunning clutch cage 180° or replace
	Defective auxiliary drive motor	• Repair or replace motor
	Motor brake not released	• Correct the electrical connection of the motor brake • If required, replace the motor brake
	Overrunning clutch cage with sprags incorrectly installed	• Contact Customer Service • Rotate the overrunning clutch cage 180° or replace
	Defective overrunning clutch	• Contact Customer Service • Replace the overrunning clutch
Leakage	Inadequate sealing of the housing cover or joints	• Seal housing cover or joints
	Labyrinth seals soiled with oil or incorrect transport position	• Check oil filling • Clean the labyrinths
	Inadequate sealing of the housing cover or joints	• Check the seals • Replace, if necessary • Seal housing cover or joints
	Defective rotary shaft sealing rings	• Check the rotary shaft sealing rings • Replace, if necessary
Oil is foaming in the gear unit	Preservation agent not completely drained off	• Change the oil
	Oil supply system left in operation for too long at low temperatures	• Switch off the oil supply system • Degas the oil
	Gear unit too cold in operation	• Switch off the gear unit • Degas the oil • Start up without cooling water during cold restart
	Water in the oil	• Take test tube sample to examine oil condition for water penetration • Have the oil examined by a chemical lab • Change the oil if necessary
	Oil defoamer has run out	• Examine the oil • Change the oil if necessary
	Unsuitable mixture of oils	• Examine the oil • Change the oil if necessary
Oil escaping from the gear unit	Inadequate sealing of the housing cover or joints	• Check the seals and if required, replace • Seal housing cover or joints • Check the compression seals and retighten screws if necessary

Possible faults	Causes	Possible remedies
	Leaking pipes	• Check the pipes, and replace or seal if necessary
Oil supply system malfunction		• Observe the instructions for the oil supply system
Elevated temperature during operation	Oil level in the gear unit housing too high	• Check the oil level • If required, correct the oil level
	Oil is too old	• Check when the last oil change was performed • Change the oil if necessary
	Oil is severely contaminated	• Change the oil
	Oil supply system or cooling coil defective	• Check the oil supply system or cooling coil • Replace defective components if necessary • Observe the instructions for the oil supply system
	Gear unit with oil cooling system: Coolant flow too low or too high	• Adjust the valves of the supply and return lines completely • Check the water oil cooler for free flow
	Gear unit with oil cooling system: The oil flow through the water oil cooler is too low	• Check the oil filter and coarse filter • If required, replace the oil filter or clean the coarse filter
	Gear unit with cooling coil: Deposits in the cooling coil	• Clean, or if necessary, replace the cooling coil
	Gear units with fan: Air intake opening in air guide cover or gear unit housing is soiled	• Clean the air guide cover and gear unit housing
	Coolant temperature too high	• Check the temperature • Correct the temperature if necessary
	Defective oil pump	• Check the oil pump function • Repair or replace oil pump if required
Elevated temperature at bearing points	Oil level in the gear unit housing too low or too high	• Check the oil level at room temperature • If required, correct the oil level
	Oil is too old	• Check when the last oil change was performed • Change the oil if necessary
	Oil supply system defective	• Check the oil supply system • Replace defective components if necessary • Observe the instructions for the oil supply system
	Defective rolling contact bearings	• Contact Customer Service • Inspect the rolling contact bearings and replace if necessary
Increased backstop temperature together with failure of the blocking function	Damaged backstop	• Contact Customer Service • Check the backstop • Replace, if necessary
Increased vibration amplitude at the bearing points	Defective rolling contact bearings	• Contact Customer Service • Inspect the rolling contact bearings and replace if necessary

Possible faults	Causes	Possible remedies
	Gear wheels defective	• Contact Customer Service • Inspect the gear wheels and replace if necessary
Contamination indicator of the double changeover filter triggers an alarm	Double changeover filter clogged	• Change over the double changeover filter as described in the separate instructions • Clean the filter element
Water in the oil	Oil supply system or cooling coil defective	• Check the oil supply system or cooling coil • Replace defective components if necessary • Observe the instructions for the oil supply system
	Machinery compartment fan is blowing cold air onto gear unit: Water condenses	• Install suitable thermal insulation to protect gear unit housing • Close the air outlet or change the direction of the air outlet using structural measures
	Climatic conditions	• Contact Customer Service • Use wet-air filter if necessary
	Oil foams in the oil sump	• Take test tube sample to examine oil condition for water penetration • Have the oil examined by a chemical lab

Table 8-2: Possible faults and how to rectify them

9 Disposal

Disposal of the gear unit

When disposing of the gear unit after its useful life, please observe the following measures:

- Remove operating oil, preservative agents and coolant from the gear unit and dispose of it according to regulations.
- Dispose of the gear unit parts according to applicable national regulations or recycle them.

Environmental protection

Observe the following environmental protection measures for disposal:

- Dispose of or recycle packaging material according to applicable national regulations.
- When changing the oil, collect the used oil in suitable containers. Use oil binding agents to clean up any oil spillages immediately.
- Store preservative agents separately from used oil.
- Dispose of used oil, preservative agents, oil binding agents and oil soaked cloths according to the applicable environmental protection regulations.

10 Spare parts

By stocking the most important replacement parts at the installation site, you can ensure that the gear unit is ready to use all the time.

Information

Damage to the gear unit due to use of unsuitable replacement parts

Only use original replacement parts from DONLY. DONLY shall not accept any warranty claims for replacement parts that are not supplied by DONLY.

Other replacement parts are not tested and approved by DONLY. Non-approved replacement parts may possibly change the design characteristics of the gear unit and thus impair its active or passive safety.

DONLY will accept no liability or warranty whatsoever for damage occurring as a result of the use of non-approved replacement parts. The same applies to any accessories which were not supplied by DONLY.

The contact address of DONLY Customer Services can be found under Service & Support.

Information required when ordering replacement parts

To order replacement parts, refer to the replacement parts list. Use DONLY replacement parts only.

When ordering replacement parts, provide the following information:

- Order number with item
- Model and size
- Part number
- Quantity